PIÈCES DÉTACHÉES

Plateaux de coupe

www.emc-motoculture.com

SXG122
SCMA48-SXG22E4B

SXG137
SCMA54-SXG22E4B

Pour SXG19
SXG22
(Version 2007)

Yvan Béal - 21, av. de l'Agriculture - B.P. 16
Z.I. du Brézet - 63014 Clermont-Ferrand Cedex 2
Tél : 04 73 91 93 51 - Télécopie : 04 73 90 23 11
www.yvanbeal.fr - E-mail : info@yvanbeal.fr
R.C.S. Clermont-Fd B 304 973 886 S.A.S. au capital de 612 000 €

03-000818-070619

www.emc-motoculture.com

Directions for use of Parts Catalogue

1. Applicable model of machines

All component and option parts used for SCMA48, SCMA54 Mower and SBC550X Collector are listed in this parts catalogue.

NOTES: SCMA48-SXG22E4B··· FOR SXG19, 22

SCMA54-SXG22E4B··· FOR SXG22

2. Explanation for head paragraph

KEY	PART CODE	DESCRIPTION	SPC	TYPE OF MODEL						ITC	COL	GRP	REMARKS
				SSM48M	SSM48F	SSM48G	SRM48M	SRM48F	SRM48G				
1	8595-211-001-20	CASE/UPPER	*	1 -229									
1A	8657-201-081-00	CASE/UPPER	*	1 230-			1						
2	8595-211-002-10	CASE/LOWER	*	1			1						
3	V523-100-801-80	PIN	*	2			2						
4	V211-260-803-00	BOLT, SEMS	*	6			6						
			*	2 -229									
			*	2 230-			2						
				2			2						
				1			1						

① ② ③ ④ ⑤ ⑥ ⑦ ⑧ ⑨

① KEY shows the location of parts diagramed in the illustration.

② Parts numbers begin with `V´ and `W´ are standard parts of the market.

③ `LH´ and `RH´ on the parts name are described against the moving direction of the machine or are described on the condition how to install parts on the machines.

④ SPC : The following symbol classifies parts to be used for machines.

`*´ means standard parts.

`T´ shows that the parts can be installed as optional parts.

`R´ shows that the parts can be used as applicable parts to replace originally equipped parts.

www.emc-motoculture.com

⑤ Upper column : QTY shows the number of parts to be used for one unit of machine.

`M´ is indicated for parts supplied by a meter long.

`l´ is indicated for parts supplied by liter.

`AR´ is indicated for parts need to be adjusted or regulated.

Lower column : serial number

—229 means serial number up to 229.

230— means serial number 230 and after.

⑥ ITC : Interchangeability

`1´…OLD ← NEW

New parts can be used in place of the old parts.

`2´…OLD → NEW

Old parts can be used in place of the new parts.

`3´…OLD →← NEW

Old parts and new parts can not be replaced each other.

⑦ COL : Color code

Color is signified with color code number for colored parts.

Please see the color list shown in the next page.

⑧ GRP : Parts shown in this column can be replaced by SET parts.

Example : Parts marked Ⓐ can be replaced by parts marked Ⓑ, and Ⓓ for Ⓒ, so the rest follow in the same alphabetical order.

⑨ Remarks

＊ Other maker's part code number is shown in this column.

＊ When Fig. No. is shown in the Remark column of SET parts or ASSY parts, each of their component parts are listed in said Fig. No.

3. Color :

The following colors are used color parts.

COLOR CODE	COLOR	SPRAY TYPE CODE NUMBER	PAINTS 4K DRUM	PAINTS 16K DRUM
7 F	MIRROR BLACK	1300-954-001-10	1300-954-003-00	1300-954-004-00

www.emc-motoculture.com

NOTE : Color code is signified only for the parts assigned by the maker as color parts.

4. Serial Numbers :

For chassies serial number is shown on the LABEL.

Please see

5. Parts Order

1) Parts numbers listed in the parts catalogue are all registered in "ISEKI on-line computer".
2) When you order parts, please make sure of correct numbers.
3) When substitute parts is available, the part number ordered will be automatically turned to a new part number.
4) Please be sure to use "ISEKI GENUINE PARTS".
   Any other similar parts other than ISEKI parts when used may cause a trouble that makes us unable to repair or guarantee the warrant.

www.emc-motoculture.com

*** Structure Table of Model ***

MODEL / FIG.	SCMA48B	SMSX42B2E4B	SCMA54	SMSX22E4B
1				*
2	*			
3	*			
4				*
5	*			
6				*
7	*			*
8	*			
9				*
10	*			
11				*
12	*			
13				*
14	*			
15				*
16	*			*
17	*			*
18	*			*
19	T			
20				T
21				*
22	*			

www.emc-motoculture.com

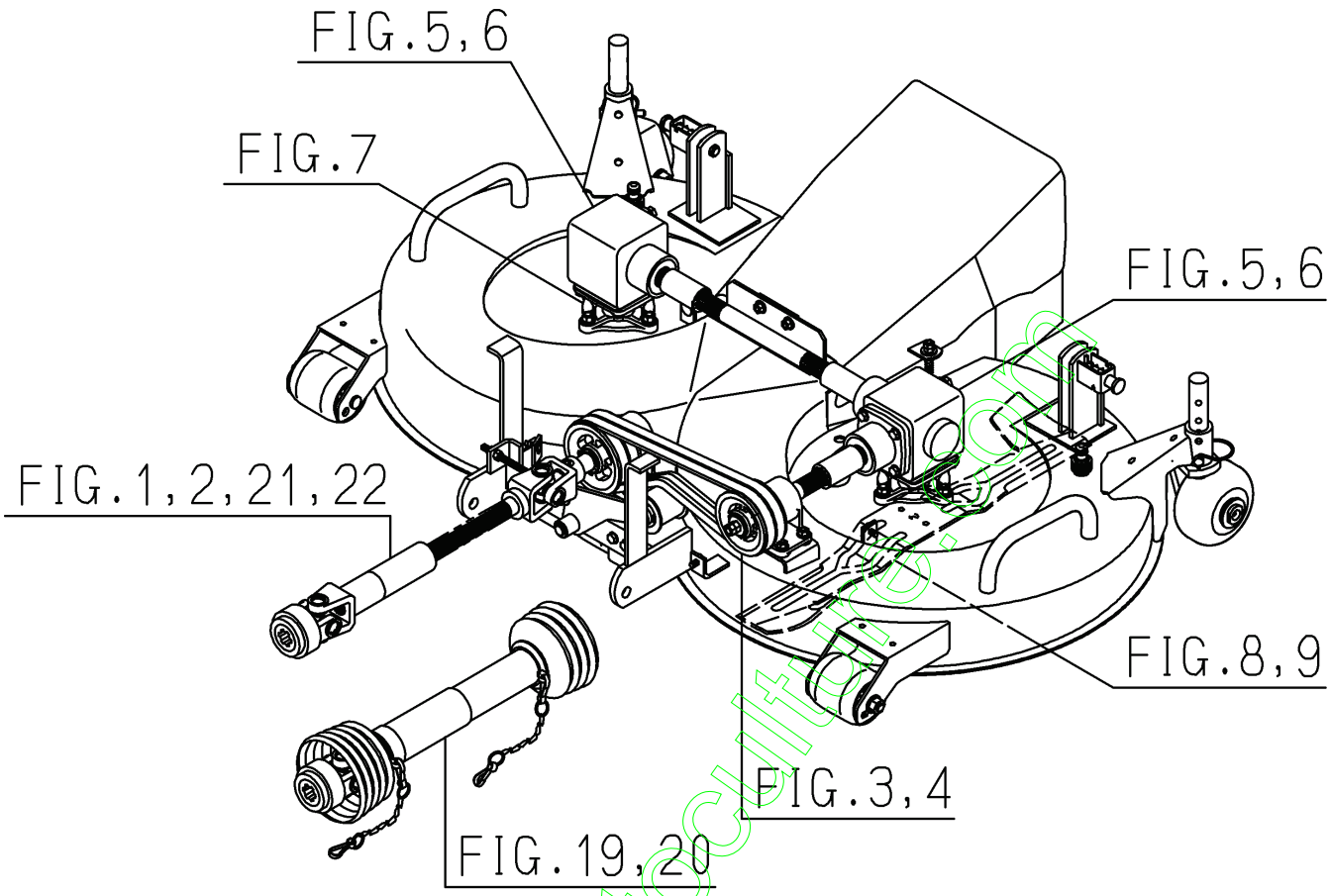

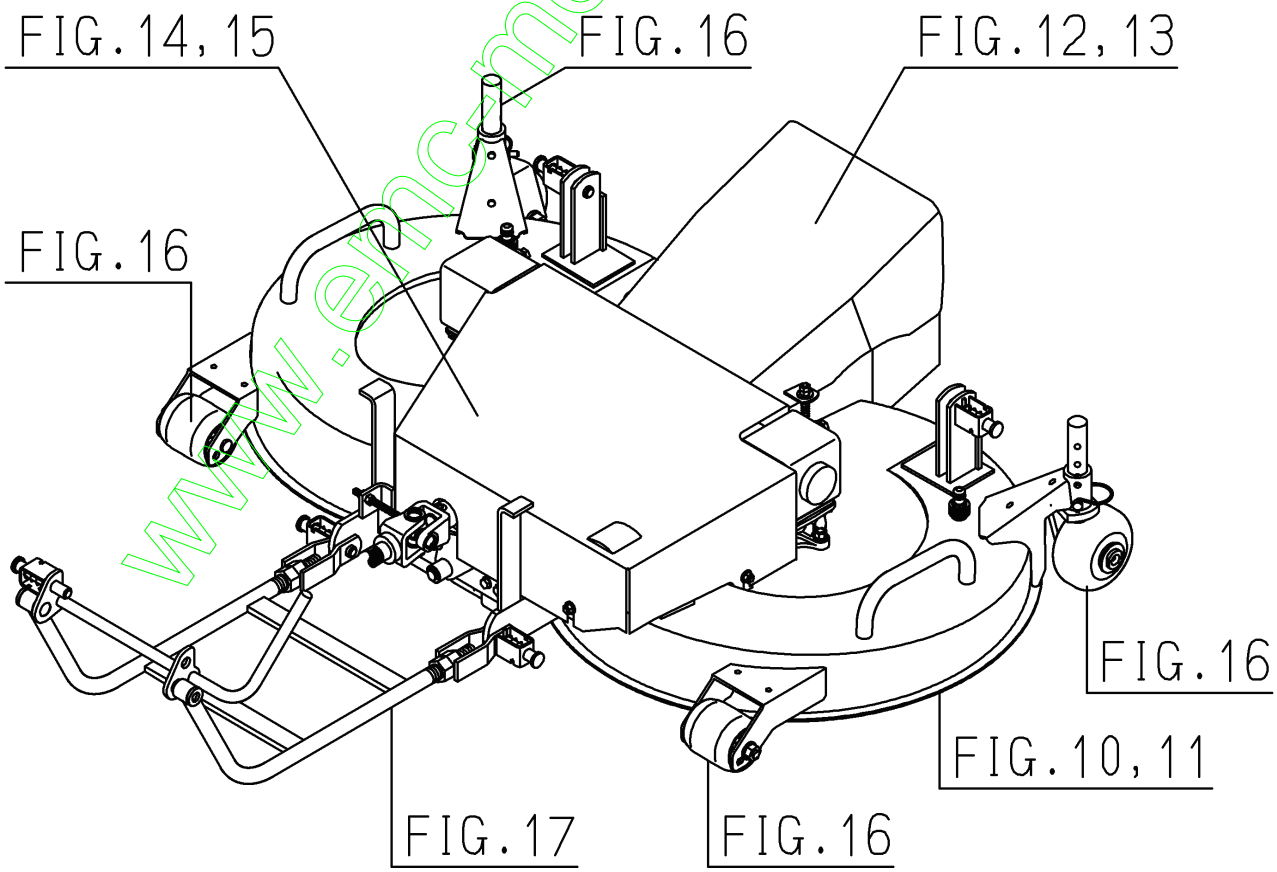

www.emcmotocultura.com

Contents

SCMA48B,54B

UNIVERSAL JOINT SYSTEM (SCMA54)····· Fig. 1
UNIVERSAL JOINT SYSTEM (SCMA48)····· Fig. 2
PULLEY SYSTEM (SCMA48)····· Fig. 3
PULLEY SYSTEM (SCMA54)····· Fig. 4
BEVEL CASE SYSTEM (SCMA48)····· Fig. 5
BEVEL CASE SYSTEM (SCMA54)····· Fig. 6
METAL SYSTEM····· Fig. 7
BLADE SYSTEM (SCMA48)····· Fig. 8
BLADE SYSTEM (SCMA54)····· Fig. 9
MOWER DECK SYSTEM (SCMA48)····· Fig. 10
MOWER DECK SYSTEM (SCMA54)····· Fig. 11
DISCHARGE COVER SYSTEM (SCMA48)····· Fig. 12
DISCHARGE COVER SYSTEM (SCMA54)····· Fig. 13
BELT COVER SYSTEM (SCMA48)····· Fig. 14
BELT COVER SYSTEM (SCMA54)····· Fig. 15
GAUGE WHEEL SYSTEM····· Fig. 16
LINK SYSTEM····· Fig. 17
LABEL····· Fig. 18

OPTIONAL PARTS

UNIVERSAL JOINT SET (SCMA48-OPTION)····· Fig. 19
UNIVERSAL JOINT SET (SCMA54-OPTION)····· Fig. 20

COMPONENT PARTS

COMPONENT PARTS
FOR 8659-101-210-00 ON Fig.1····· Fig. 21

www.emc-motoculture.com

COMPONENT PARTS

FOR 8662-101-210-00 ON Fig.2 ..... Fig. 22

www.emc-motoculture.com

FIG. 1 UNIVERSAL JOINT SYSTEM (SCMA54)

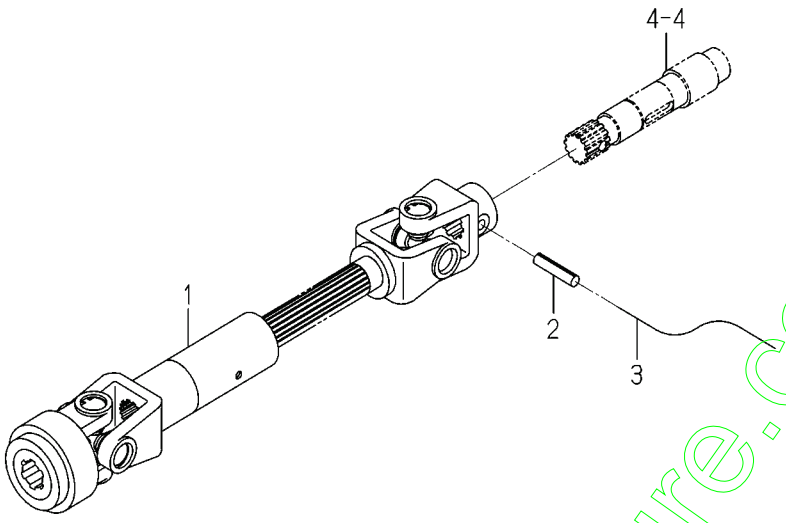

8659-101 -0100

KEY	PART CODE	DESCRIPTION	SPC	TYPE OF MODEL SCMA48B	TYPE OF MODEL SCMA54B	ITC	COL	GRP	REMARKS
1	8659-101-210-00	JOINT/UNIVERSAL SET	*		1				FIG 021
2	V580-140-804-00	PIN,SPRING/8 X40 W	*		1				
3		WIRE	*		1				

www.enc-motoculture.com

FIG. 2 UNIVERSAL JOINT SYSTEM (SCMA48)

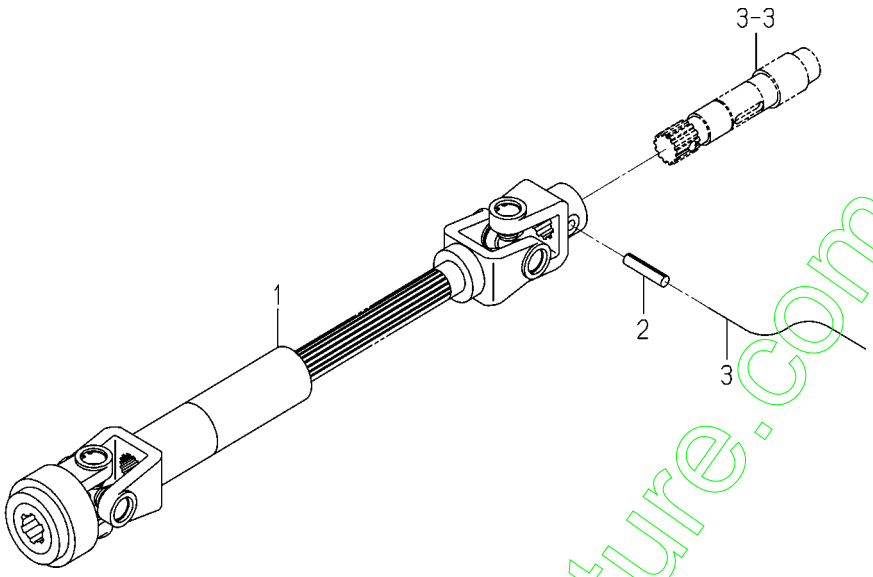

8662-101 -0100

KEY	PART CODE	DESCRIPTION	SPC	TYPE OF MODEL		ITC	COL	GRP	REMARKS
				SCMA48B	SCMA54B				
1	8662-101-210-00	JOINT/UNIVERSAL SET	*	1					FIG 022
2	V580-140-804-00	PIN,SPRING/8 X40 W	*	1					
3		WIRE	*	1					

www.emc-motoculture.com

FIG. 3 PULLEY SYSTEM (SCMA48)

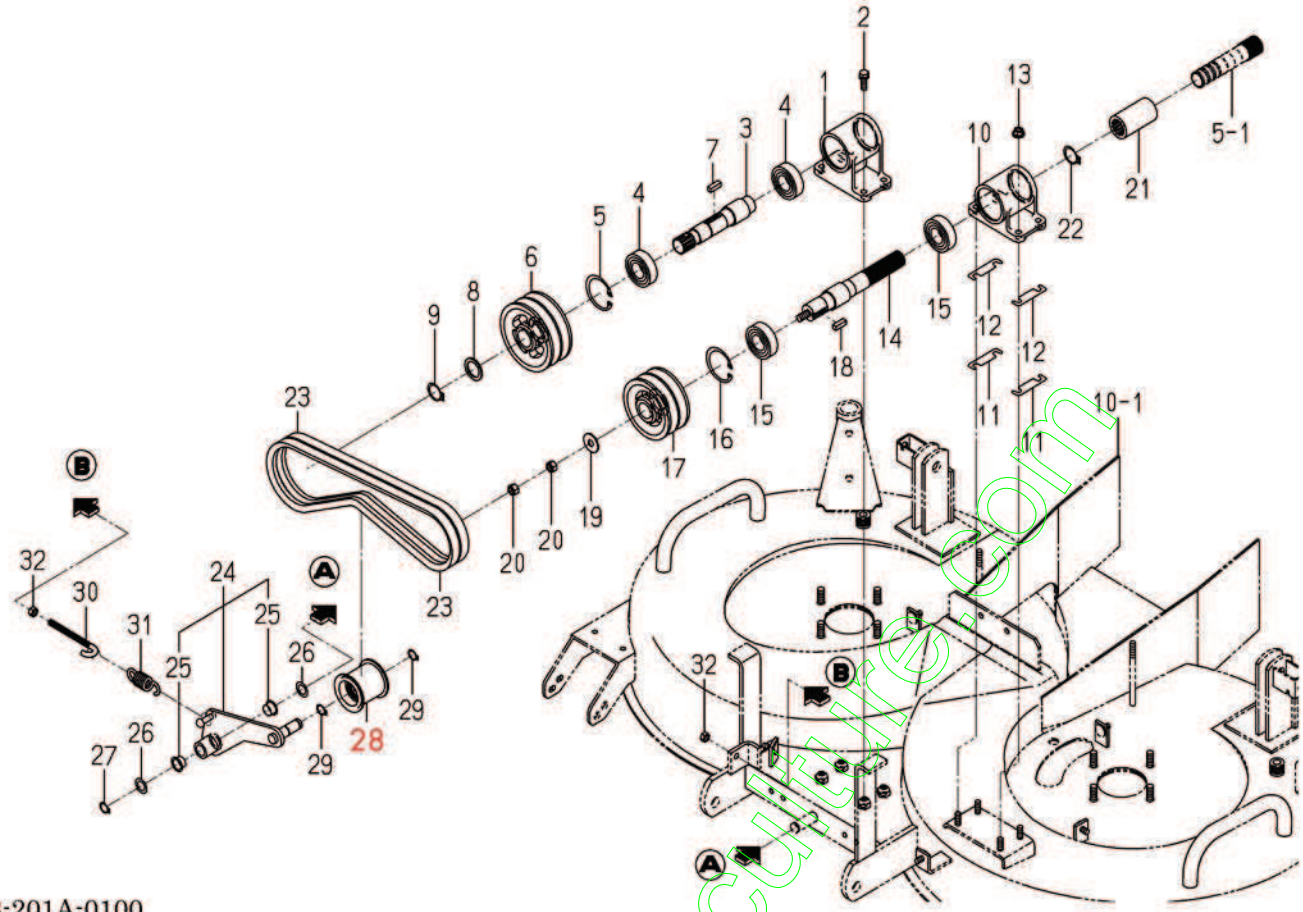

8663-201A-0100

KEY	PART CODE	DESCRIPTION	SPC	TYPE OF MODEL SCMA48B	SCMA54B	ITC	COL	GRP	REMARKS
1	8663-201-051-00	METAL/INPUT	*	1					
2	V211-260-802-50	BOLT/S	*	4					
3	8663-201-052-00	SHAFT/INPUT	*	1					
4	V600-150-620-50	BEARING,RB/6205SS	*	2					
5	V705-140-052-00	RING,SNAP/52 C	*	1					
6	8663-201-053-00	PULLEY/V2B102	*	1					
7	8663-201-054-00	KEY/07X07X22	*	1					
8	1415-216-602-00	WASHER/26X35X2	*	1					
9	V704-140-025-00	RING,SNAP/25 C	*	1					
10	8663-201-055-00	METAL/OUTPUT	*	1					
11	8663-201-059-00	SHIM/1.0	*	2					
12	8663-201-061-00	SHIM/0.5	*	2					
13	V363-260-008-00	NUT/WASHER	*	4					
14	8663-201-056-00	SHAFT/48/LH/FRONT	*	1					
15	V600-150-620-50	BEARING,RB/6205SS	*	2					
16	V705-140-052-00	RING,SNAP/52 C	*	1					
17	8663-201-057-00	PULLEY/V2B90	*	1					
18	8663-201-054-00	KEY/07X07X22	*	1					
19	1444-116-007-00	WASHER/11X30X2	*	1					
20	V304-260-010-00	NUT	*	2					
21	1560-220-004-10	COUPRING/21X36X65	*	1					
22	V704-140-025-00	RING,SNAP/25 C	*	1					
23	8663-201-058-10	BELT/VB036	*	2					
24	8663-201-510-00	ARM/TENSION ASSY	*	1					
25	2502-407-001-10	BUSH/15X17X11	*	2					
26	3517-205-007-00	WASHER	*	2					
27	V704-140-015-00	RING,SNAP/15 C	*	1					
28	8663-201-062-00	PULLEY/TENSION/50X46	*	1					
	V705-140-035-00	RING, CIRCLIP	*	2					
	V600-150-620-20	BEARING,RB/6202SS	*	2					
29	V704-140-015-00	RING,SNAP/15 C	*	2					
30	3737-341-007-00	ROD,CHAIN TENSION	*	1					

www.emotocycle.com

FIG. 3 PULLEY SYSTEM (SCMA48)

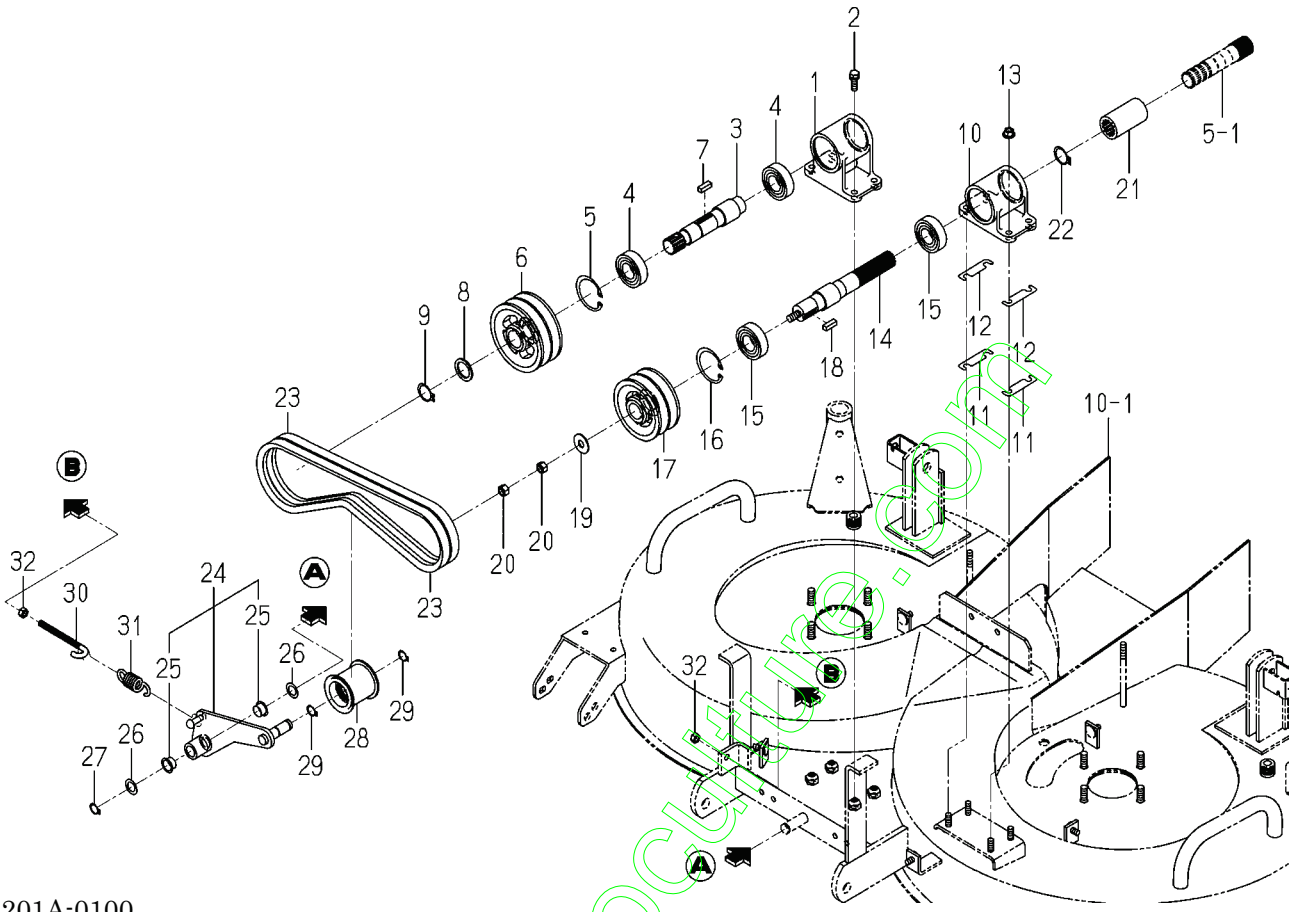

8663-201A-0100

KEY	PART CODE	DESCRIPTION	SPC	TYPE OF MODEL SCMA48B	TYPE OF MODEL SCMA54B	ITC	COL	GRP	REMARKS
31	1337-401-006-00	SPRING	*	1					
32	V304-260-008-00	NUT	*	2					

www.emc-motoculture.com

FIG. 4 PULLEY SYSTEM (SCMA54)

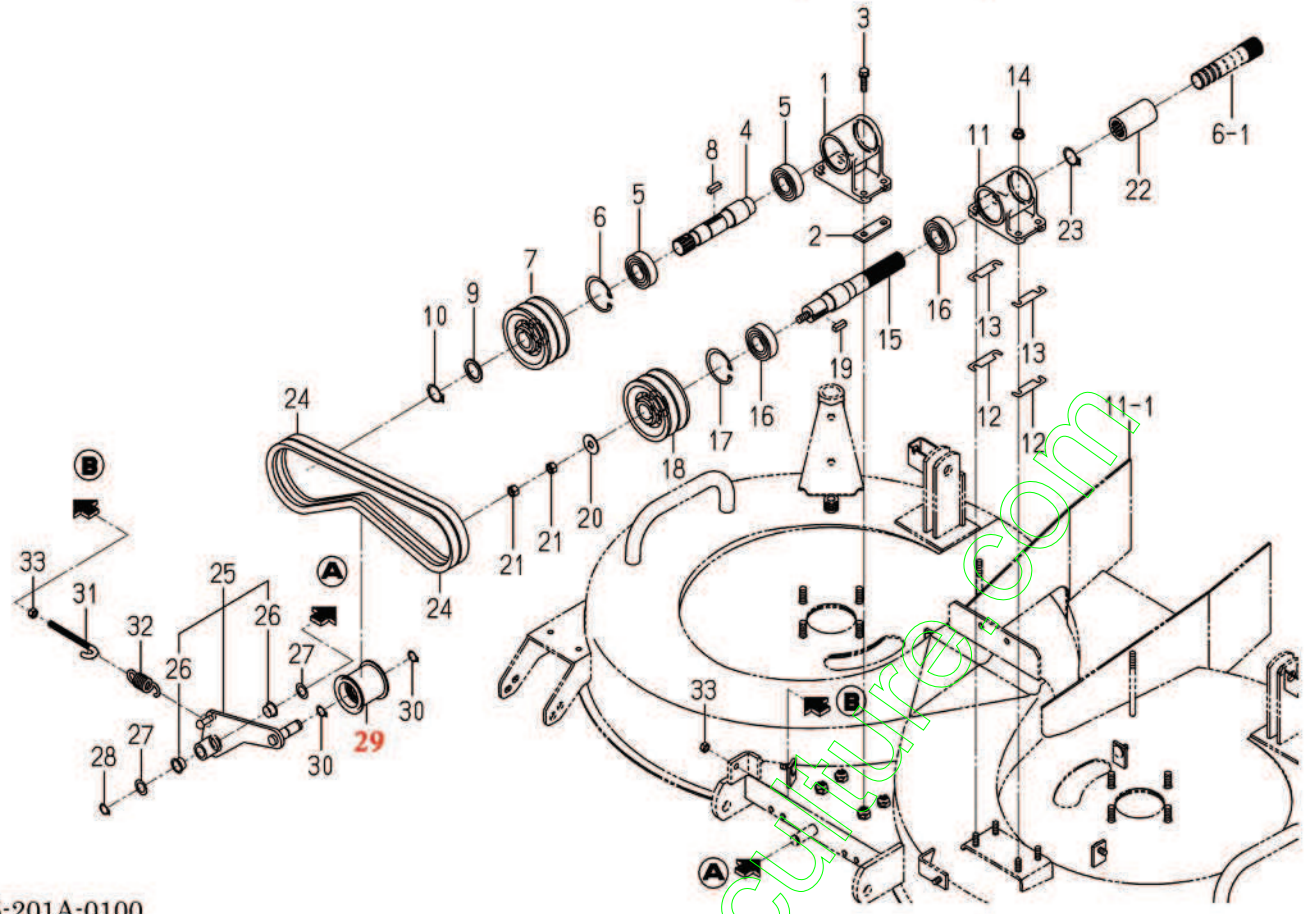

8665-201A-0100

KEY	PART CODE	DESCRIPTION	SPC	TYPE OF MODEL SCMA48B	TYPE OF MODEL SCMA54B	ITC	COL	GRP	REMARKS
1	8663-201-051-00	METAL/INPUT	*		1				
2	8665-201-053-00	PLATE/I/22X64	*		2				
3	V211-260-803-00	BOLT,SEMS	*		4				
4	8663-201-052-00	SHAFT/INPUT	*		1				
5	V600-150-620-50	BEARING,RB/6205SS	*		2				
6	V705-140-052-00	RING,SNAP/52 C	*		1				
7	8665-201-051-00	PULLEY/V2B93	*		1				
8	8663-201-054-00	KEY/07X07X22	*		1				
9	1415-216-602-00	WASHER/26X35X2	*		1				
10	V704-140-025-00	RING,SNAP/25 C	*		1				
11	8663-201-055-00	METAL/OUTPUT	*		1				
12	8663-201-059-00	SHIM/1.0	*		2				
13	8663-201-061-00	SHIM/0.5	*		2				
14	V363-260-008-00	NUT/WASHER	*		4				
15	8663-201-056-00	SHAFT/48/LH/FRONT	*		1				
16	V600-150-620-50	BEARING,RB/6205SS	*		2				
17	V705-140-052-00	RING,SNAP/52 C	*		1				
18	8663-201-057-00	PULLEY/V2B90	*		1				
19	8663-201-054-00	KEY/07X07X22	*		1				
20	1444-116-007-00	WASHER/11X30X2	*		1				
21	V304-260-010-00	NUT	*		2				
22	1560-220-004-10	COUPRING/21X36X65	*		1				
23	V704-140-025-00	RING,SNAP/25 C	*		1				
24	8665-201-052-10	BELT/VB038	*		2				
25	8663-201-510-00	ARM/TENSION ASSY	*		1				
26	2502-407-001-10	BUSH/15X17X11	*		2				
27	3517-205-007-00	WASHER	*		2				
28	V704-140-015-00	RING,SNAP/15 C	*		1				
29	8663-201-062-00	PULLEY/TENSION/50X46	*		1				
	V705-140-035-00	RING,CIRCLIP	*		2				
	V600-150-620-20	BEARING,RB/6202SS	*		2				
30	V704-140-015-00	RING,SNAP/15 C	*		2				

www.kic-motorcycle.com

FIG. 4 PULLEY SYSTEM (SCMA54)

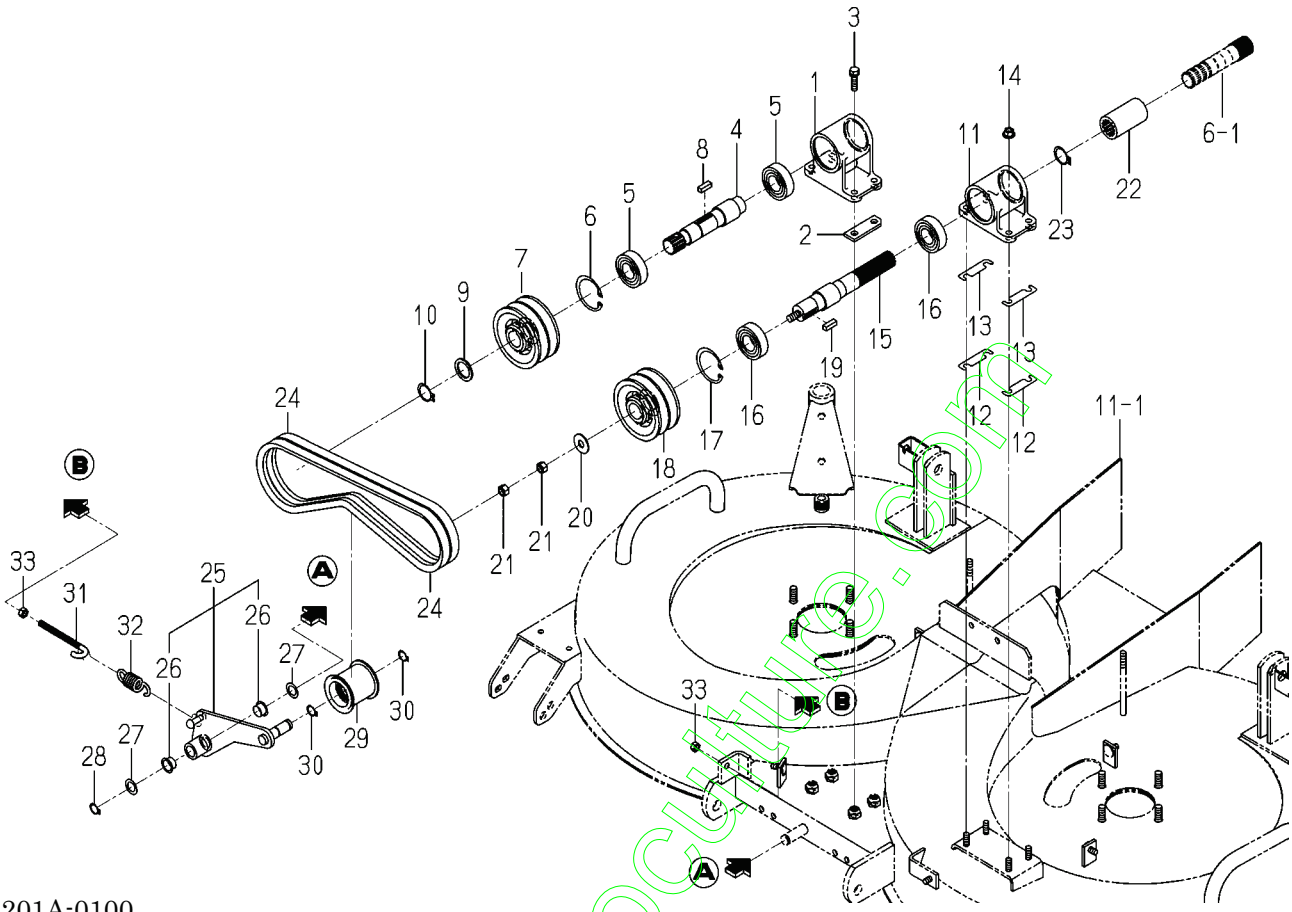

8665-201A-0100

KEY	PART CODE	DESCRIPTION	SPC	TYPE OF MODEL SCMA48B	TYPE OF MODEL SCMA54B	ITC	COL	GRP	REMARKS
31	3737-341-007-00	ROD,CHAIN TENSION	*		1				
32	1337-401-006-00	SPRING	*		1				
33	V304-260-008-00	NUT	*		2				

www.emc-motoculture.com

FIG. 5 BEVEL CASE SYSTEM (SCMA48)

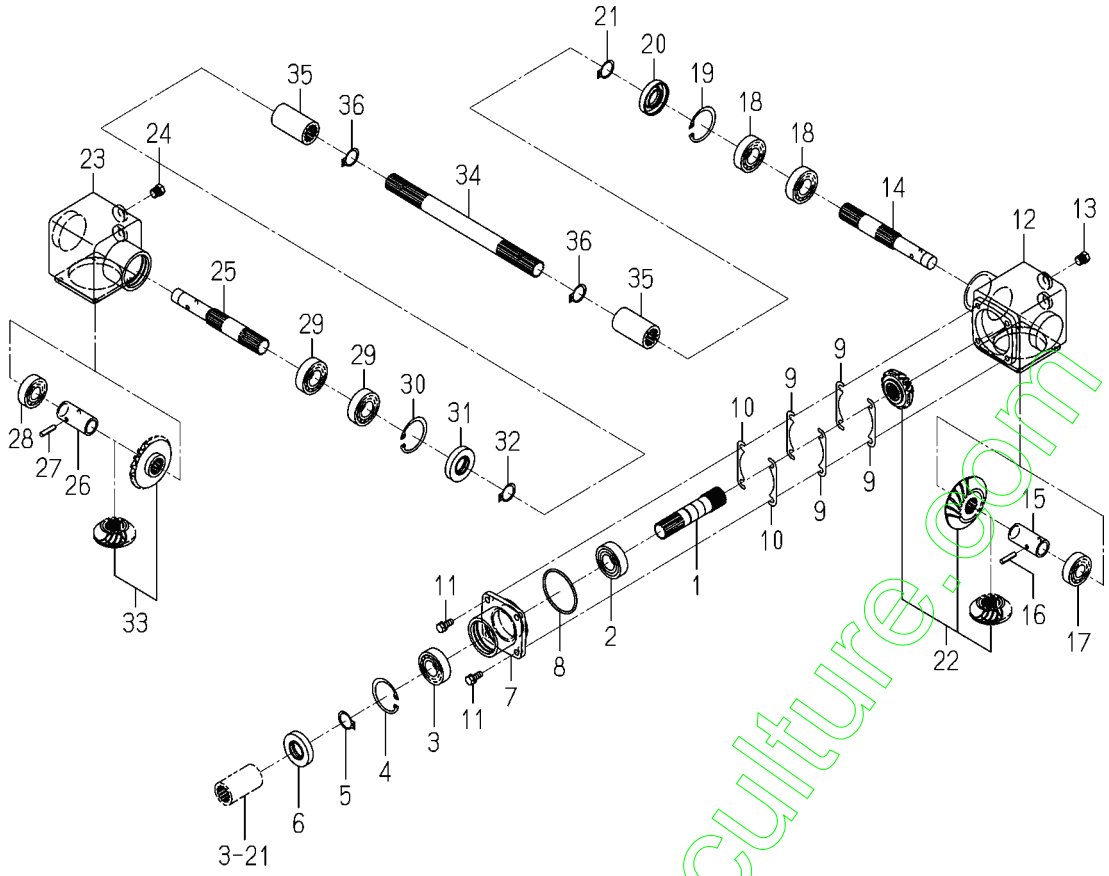

8663-202A-0100

KEY	PART CODE	DESCRIPTION	SPC	TYPE OF MODEL SCMA48B	TYPE OF MODEL SCMA54B	ITC	COL	GRP	REMARKS
1	8663-202-051-00	SHAFT/LH/REAR	*	1					
2	1594-221-001-00	BEARING/BALL 6205SH2	*	1					
3	V600-110-620-50	BEARING,RB/6205	*	1					
4	V705-140-052-00	RING,SNAP/52 C	*	1					
5	V704-140-025-00	RING,SNAP/25 C	*	1					
6	V744-125-521-00	SEAL,OIL/TC255210	*	1					
7	8663-202-052-10	METAL/BEVELCASE	*	1					
8	V721-103-106-50	O-RING/G65	*	1					
9	8663-202-055-00	SHIM/0.1	*	4					
10	8663-202-056-00	SHIM/0.2	*	2					
11	V211-260-802-00	BOLT/S	*	4					
12	8663-202-057-10	CASE/BEVEL/LH	*	1					
13	7955-201-026-00	PLUG,DRAIN (1/4)	*	2					
14	8663-202-058-00	SHAFT/CASE	*	1					
15	8663-202-059-00	HUB/SPACER	*	1					
16	V580-140-602-80	PIN,SPRING/6 X28 W	*	1					
17	V600-110-620-40	BEARING,RB/6204	*	1					
18	V600-110-620-50	BEARING,RB/6205	*	2					
19	V705-140-052-00	RING,SNAP/52 C	*	1					
20	V744-125-521-00	SEAL,OIL/TC255210	*	1					
21	V704-140-025-00	SNAP/RING	*	1					
22	8663-202-510-00	GEAR/BEVEL/21-25-21	*	1					
23	8663-202-062-10	CASE/BEVEL/RH	*	1					
24	7955-201-026-00	PLUG,DRAIN (1/4)	*	2					
25	8663-202-058-00	SHAFT/CASE	*	1					
26	8663-202-059-00	HUB/SPACER	*	1					
27	V580-140-602-80	PIN,SPRING/6 X28 W	*	1					
28	V600-110-620-40	BEARING,RB/6204	*	1					
29	V600-110-620-50	BEARING,RB/6205	*	2					
30	V705-140-052-00	RING,SNAP/52 C	*	1					

www.eine-motoculture.com

FIG. 5 BEVEL CASE SYSTEM (SCMA48)

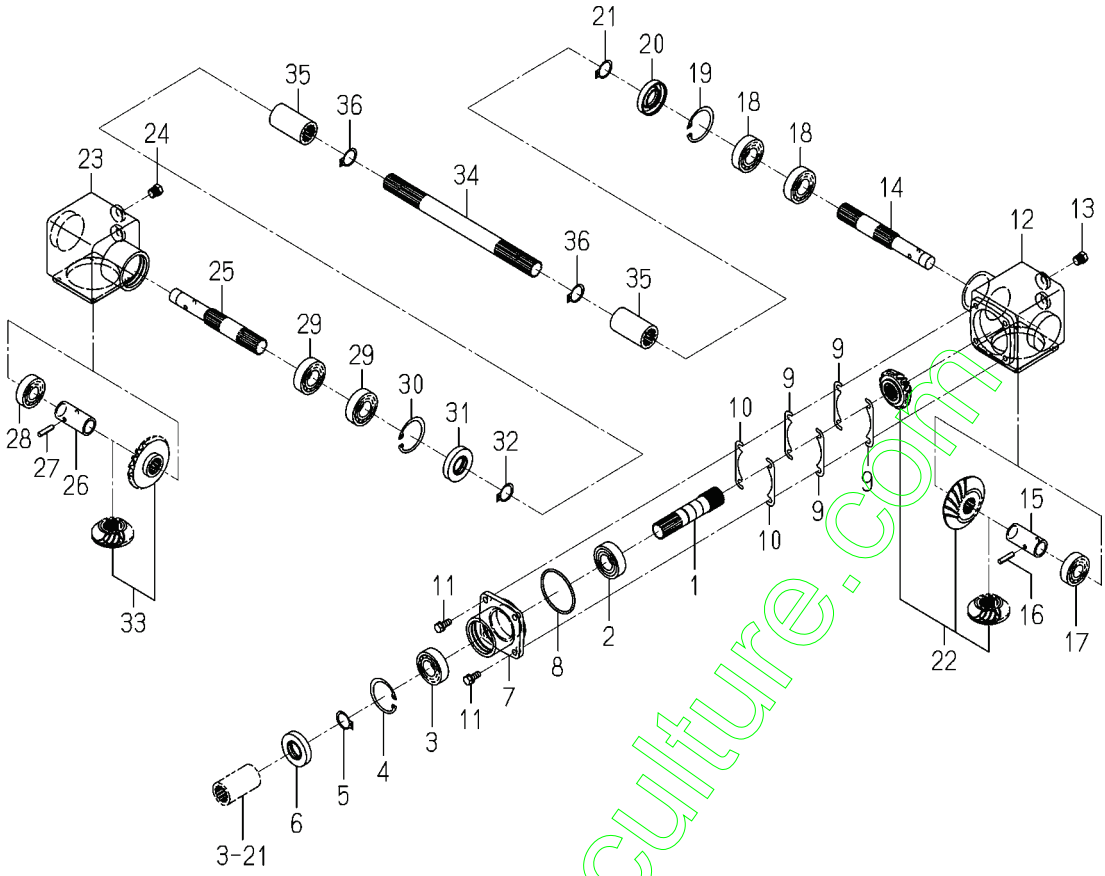

8663-202A-0100

KEY	PART CODE	DESCRIPTION	SPC	TYPE OF MODEL SCMA48B	TYPE OF MODEL SCMA54B	ITC	COL	GRP	REMARKS
31	V744-125-521-00	SEAL,OIL/TC255210	*	1					
32	V704-140-025-00	SNAP/RING	*	1					
33	8654-201-410-10	GEAR/BEVEL/25-2 SET	*	1					
34	8663-202-061-00	SHAFT/CENTER/48	*	1					
35	1560-220-004-10	COUPRING/21X36X65	*	2					
36	V704-140-025-00	RING,SNAP/25 C	*	2					

www.emotoculture.com

FIG. 6 BEVEL CASE SYSTEM (SCMA54)

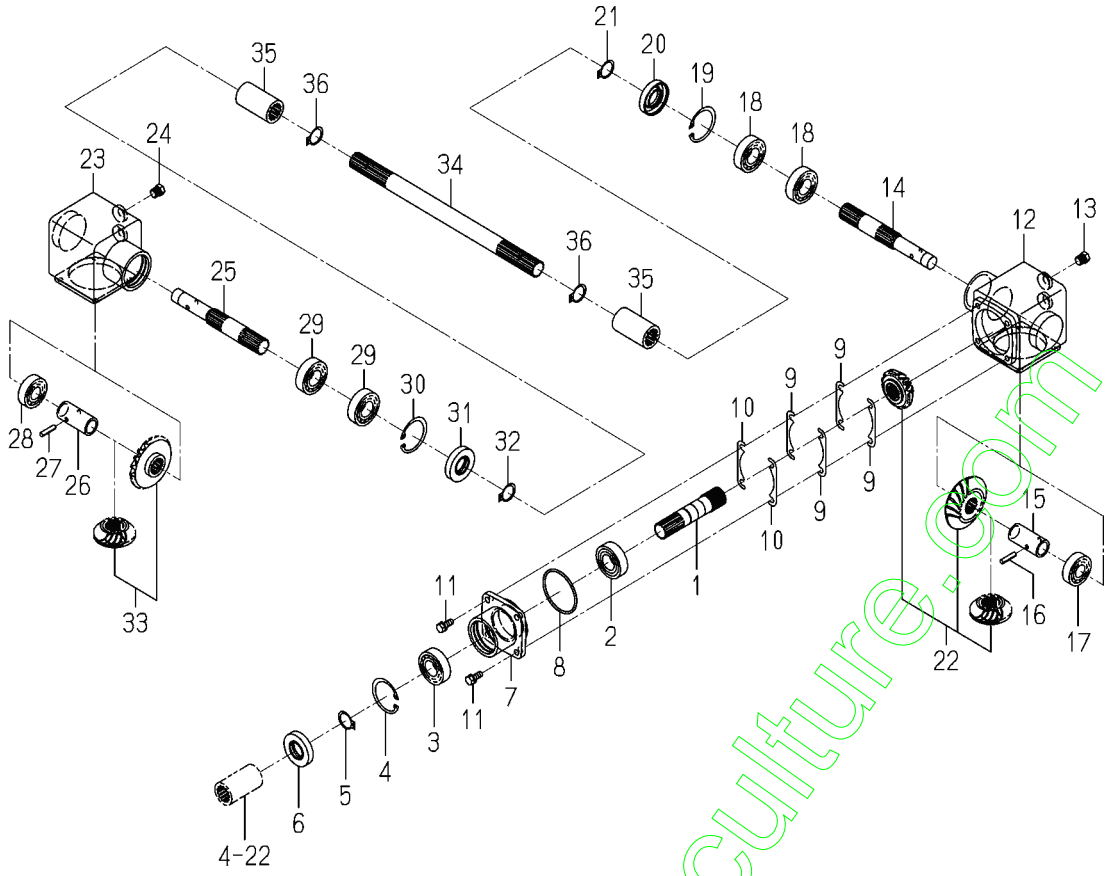

8665-202A-0100

KEY	PART CODE	DESCRIPTION	SPC	TYPE OF MODEL SCMA48B	TYPE OF MODEL SCMA54B	ITC	COL	GRP	REMARKS
1	8663-202-051-00	SHAFT/LH/REAR	*		1				
2	1594-221-001-00	BEARING/BALL 6205SH2	*		1				
3	V600-110-620-50	BEARING,RB/6205	*		1				
4	V705-140-052-00	RING,SNAP/52 C	*		1				
5	V704-140-025-00	RING,SNAP/25 C	*		1				
6	V744-125-521-00	SEAL,OIL/TC255210	*		1				
7	8663-202-052-10	METAL/BEVELCASE	*		1				
8	V721-103-106-50	O-RING/G65	*		1				
9	8663-202-055-00	SHIM/0.1	*		4				
10	8663-202-056-00	SHIM/0.2	*		2				
11	V211-260-802-00	BOLT/S	*		4				
12	8663-202-057-10	CASE/BEVEL/LH	*		1				
13	7955-201-026-00	PLUG,DRAIN (1/4)	*		2				
14	8663-202-058-00	SHAFT/CASE	*		1				
15	8663-202-059-00	HUB/SPACER	*		1				
16	V580-140-602-80	PIN,SPRING/6 X28 W	*		1				
17	V600-110-620-40	BEARING,RB/6204	*		1				
18	V600-110-620-50	BEARING,RB/6205	*		2				
19	V705-140-052-00	RING,SNAP/52 C	*		1				
20	V744-125-521-00	SEAL,OIL/TC255210	*		1				
21	V704-140-025-00	SNAP/RING	*		1				
22	8663-202-510-00	GEAR/BEVEL/21-25-21	*		1				
23	8663-202-062-10	CASE/BEVEL/RH	*		1				
24	7955-201-026-00	PLUG,DRAIN (1/4)	*		2				
25	8663-202-058-00	SHAFT/CASE	*		1				
26	8663-202-059-00	HUB/SPACER	*		1				
27	V580-140-602-80	PIN,SPRING/6 X28 W	*		1				
28	V600-110-620-40	BEARING,RB/6204	*		1				
29	V600-110-620-50	BEARING,RB/6205	*		2				
30	V705-140-052-00	RING,SNAP/52 C	*		1				

www.eine-motoculture.com

FIG. 6 BEVEL CASE SYSTEM (SCMA54)

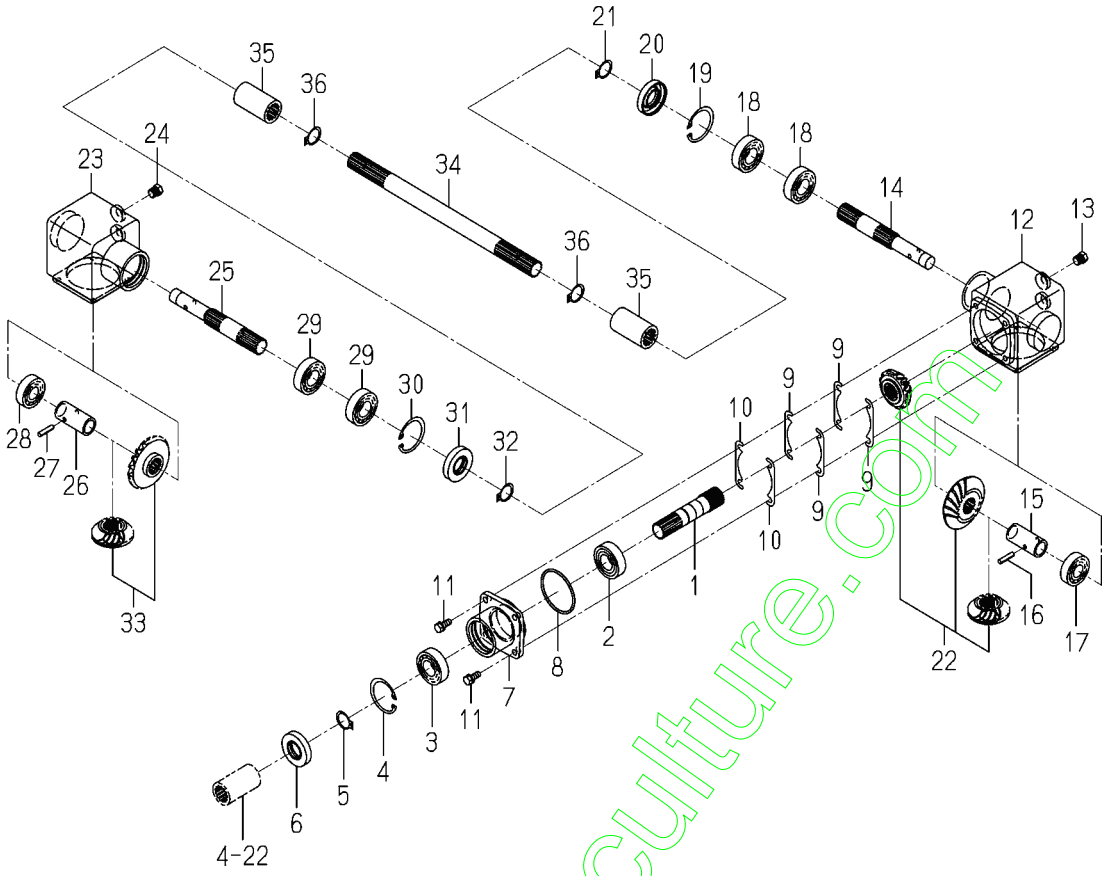

8665-202A-0100

KEY	PART CODE	DESCRIPTION	SPC	TYPE OF MODEL SCMA48B	TYPE OF MODEL SCMA54B	ITC	COL	GRP	REMARKS
31	V744-125-521-00	SEAL,OIL/TC255210	*		1				
32	V704-140-025-00	SNAP/RING	*		1				
33	8654-201-410-10	GEAR/BEVEL/25-2 SET	*		1				
34	8665-202-051-00	SHAFT/CENTER/54	*		1				
35	1560-220-004-10	COUPRING/21X36X65	*		2				
36	V704-140-025-00	RING,SNAP/25 C	*		2				

www.emotoculture.com

FIG. 7 METAL SYSTEM

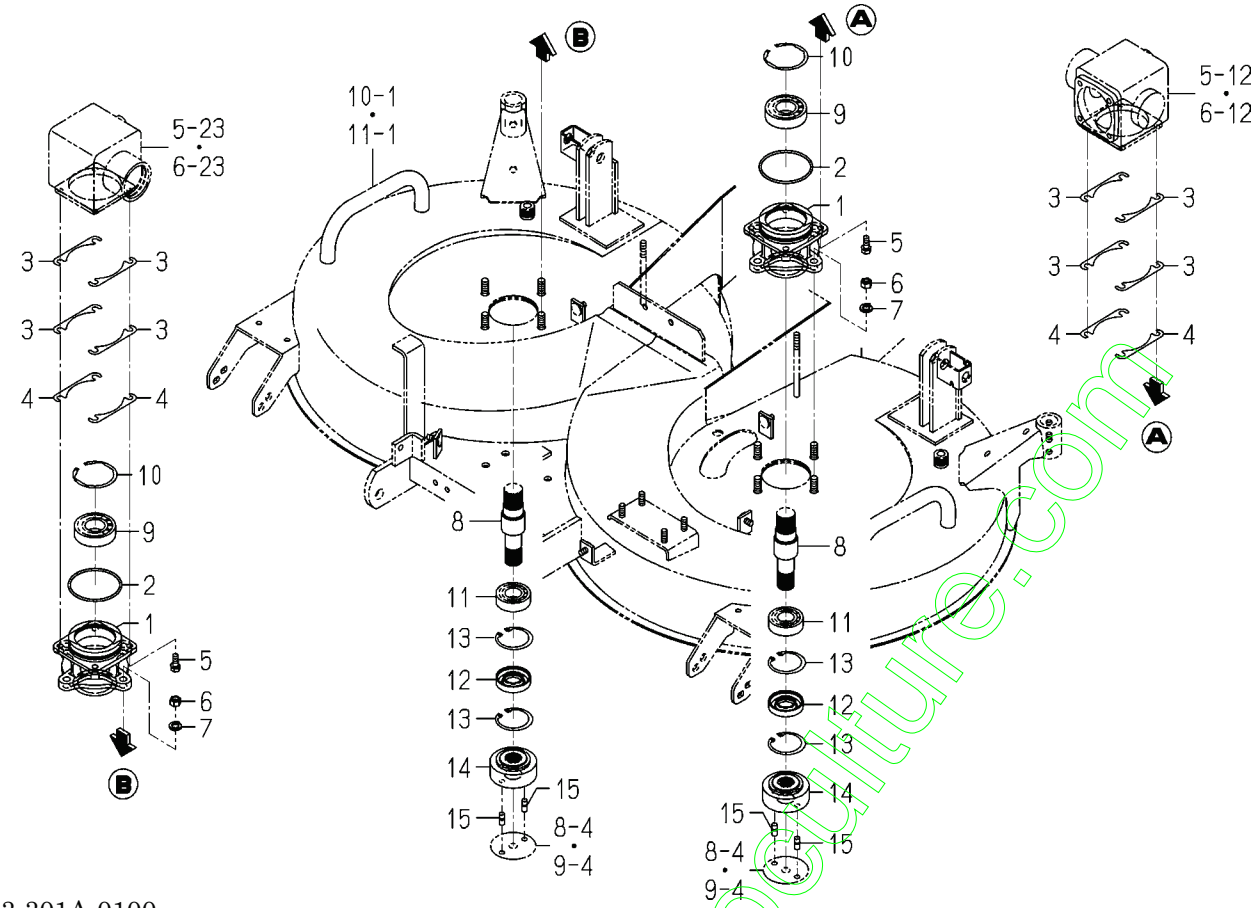

8663-301A-0100

KEY	PART CODE	DESCRIPTION	SPC	TYPE OF MODEL SCMA48B	TYPE OF MODEL SCMA54B	ITC	COL	GRP	REMARKS
1	8663-301-051-00	METAL/BLADE/B	*	2	2				
2	V721-103-107-50	O-RING/G75	*	2	2				
3	8595-201-021-00	SHIM/0.1	*	4	4				
4	8595-201-022-00	SHIM/0.2	*	2	2				
5	V211-260-802-00	BOLT/S	*	8	8				
6	V304-260-010-00	NUT	*	8	8				
7	V401-160-010-00	WASHER,SP/M10	*	8	8				
8	8663-301-052-00	SHAFT/BLADE/B	*	2	2				
9	V600-110-620-60	BEARING,RB/6206	*	2	2				
10	V707-140-062-00	RING/SNAP	*	2	2				
11	V600-110-620-50	BEARING,RB/6205	*	2	2				
12	V744-125-521-00	SEAL,OIL/TC255210	*	2	2				
13	V705-140-052-00	RING,SNAP/52 C	*	4	4				
14	8663-301-053-00	COLLAR/BLADE	*	2	2				
15	8663-301-004-00	PIN/08X18	*	4	4				

www.spc-motoculture.com

FIG. 8 BLADE SYSTEM (SCMA48)

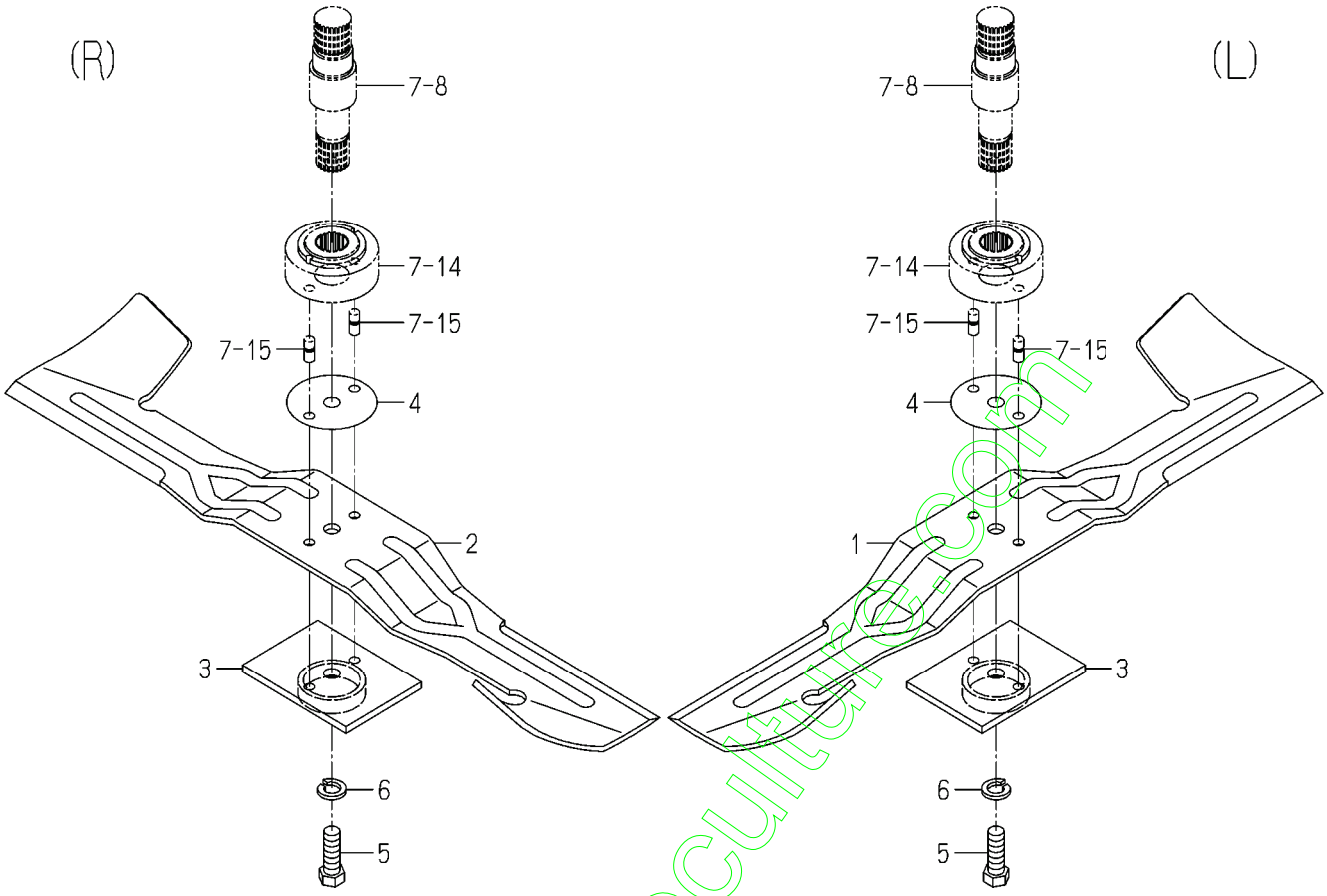

8663-306 -0100

KEY	PART CODE	DESCRIPTION	SPC	TYPE OF MODEL SCMA48B	TYPE OF MODEL SCMA54B	ITC	COL	GRP	REMARKS
1	8663-306-001-10	BLADE/60X640/C	*	1					
2	8663-306-002-10	BLADE/60X640/D	*	1					
3	8663-306-210-10	PLATE/I/80X110 COMP	*	2					
4	8663-306-004-00	SHIM/1.2	*	2					
5	V203-361-203-50	BOLT	*	2					
6	V401-160-012-00	WASHER,SP/M12	*	2					

www.emc-motoculture.com

FIG. 9 BLADE SYSTEM (SCMA54)

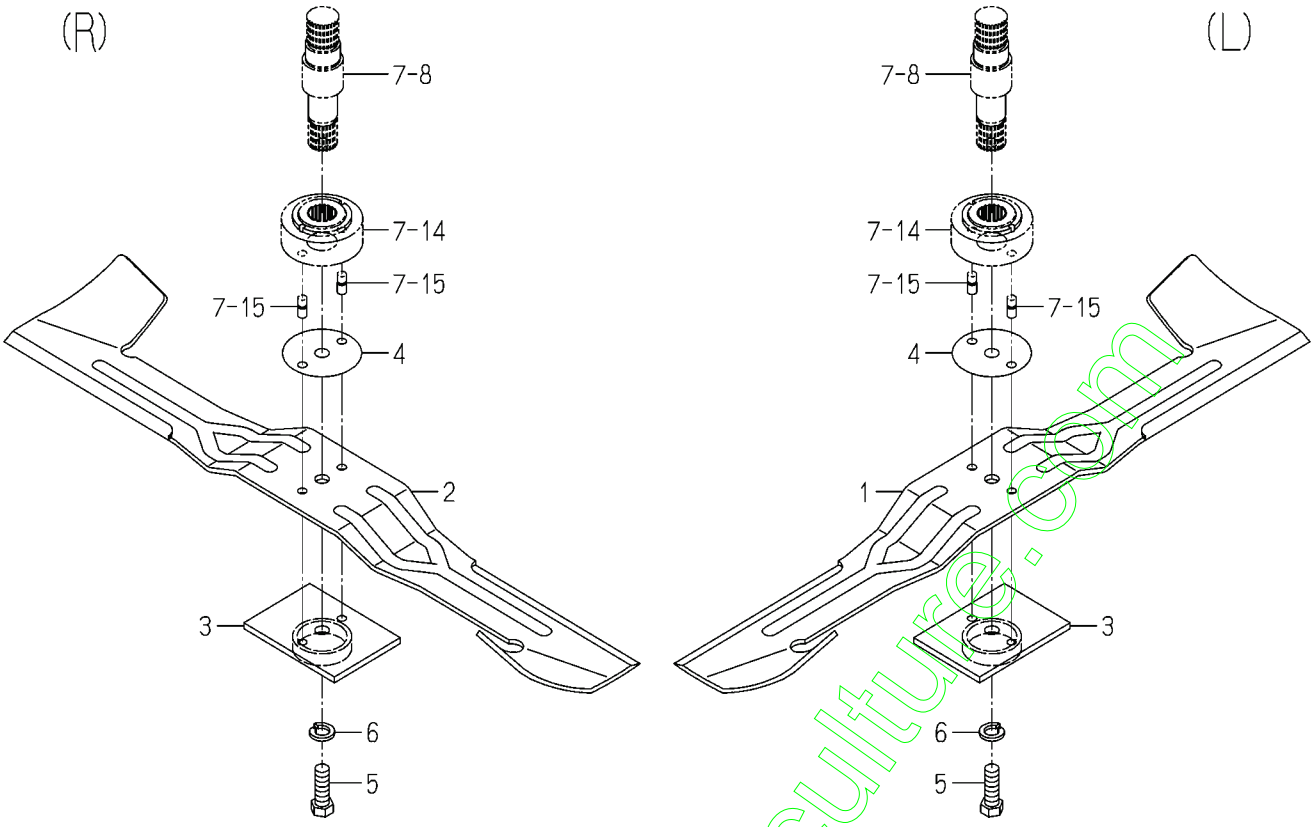

8665-306 -0100

KEY	PART CODE	DESCRIPTION	SPC	TYPE OF MODEL SCMA48B	TYPE OF MODEL SCMA54B	ITC	COL	GRP	REMARKS
1	8665-306-001-10	BLADE/60X716/C	*		1				
2	8665-306-002-10	BLADE/60X716/D	*		1				
3	8663-306-210-10	PLATE/I/80X110 COMP	*		2				
4	8663-306-004-00	SHIM/1.2	*		2				
5	V203-361-203-50	BOLT	*		2				
6	V401-160-012-00	WASHER,SP/M12	*		2				

www.emc-motoculture.com

FIG. 10 MOWER DECK SYSTEM (SCMA48)

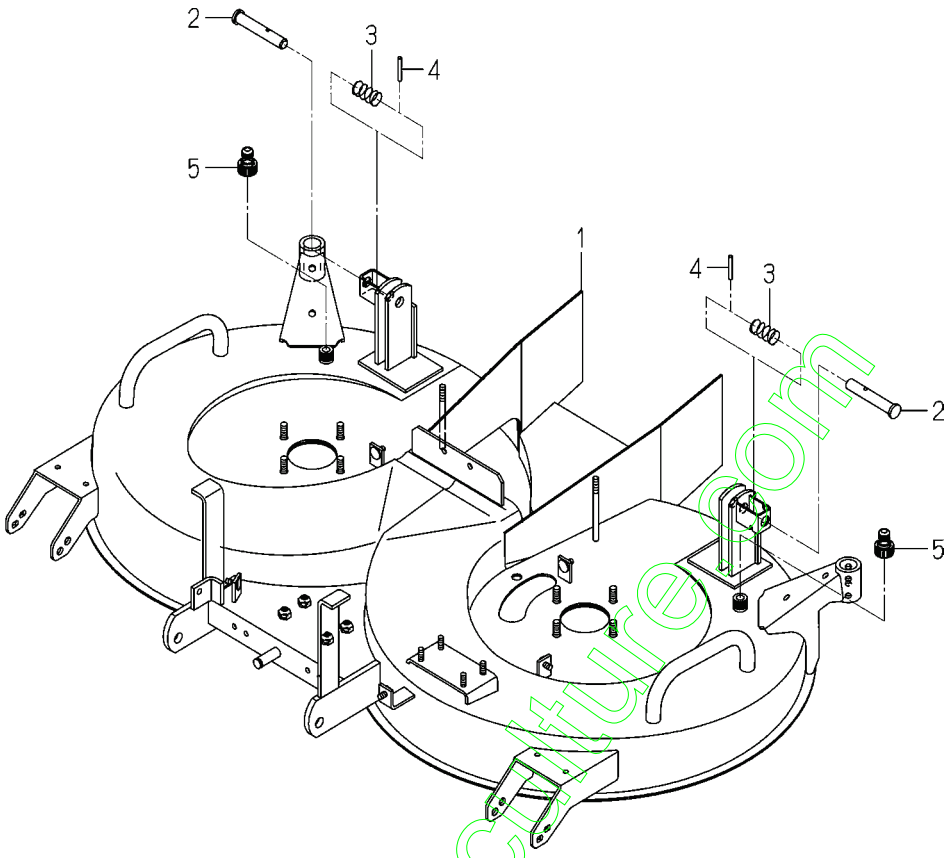

8663-402A-0100

KEY	PART CODE	DESCRIPTION	SPC	TYPE OF MODEL		ITC	COL	GRP	REMARKS
				SCMA48B	SCMA54B				
1	8663-402-510-20	DECK/MOWER/48/B COMP	*	1			7F		
2	8595-608-082-00	PIN/16X96	*	2					
3	1560-601-028-00	SPRING/HC042	*	2					
4	V580-140-504-00	PIN,SPRING/5 X40 W	*	2					
5	8663-402-002-00	PLUG/HOSE/A	*	2					

www.enginetoolculture.com

FIG. 11 MOWER DECK SYSTEM (SCMA54)

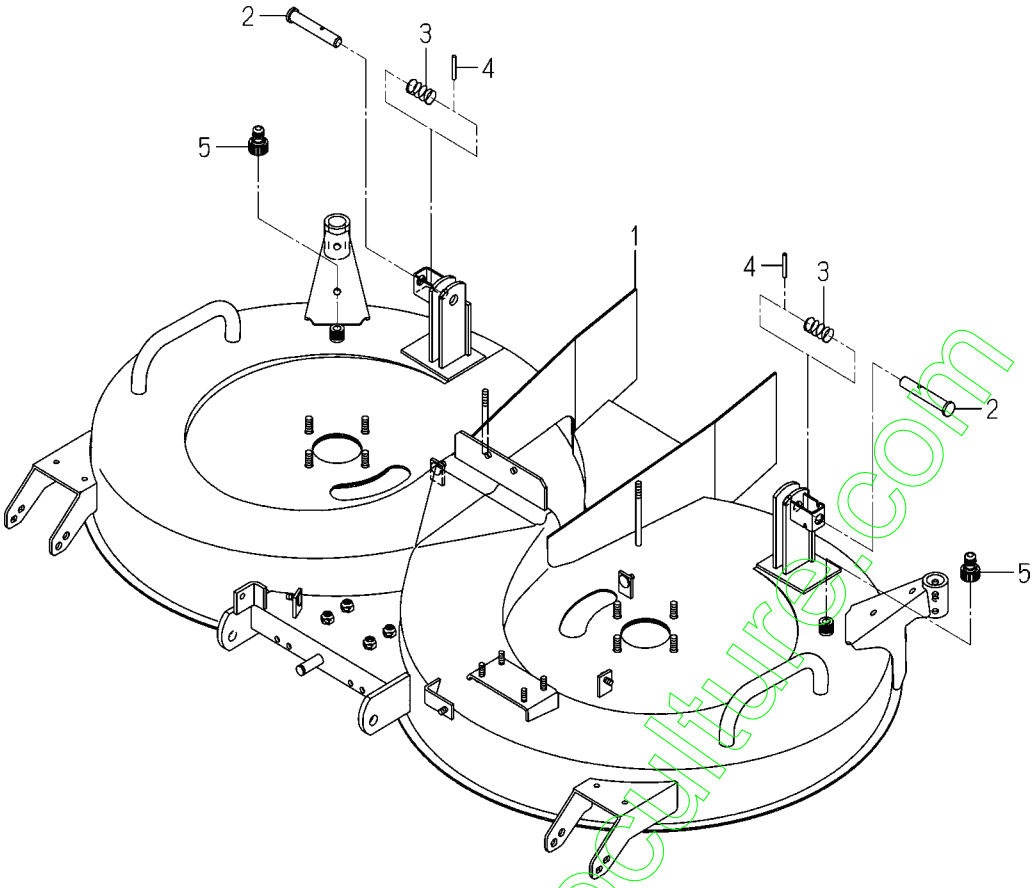

8665-402A-0100

KEY	PART CODE	DESCRIPTION	SPC	TYPE OF MODEL SCMA48B	TYPE OF MODEL SCMA54B	ITC	COL	GRP	REMARKS
1	8665-402-510-20	DECK/MOWER/54/B COMP	*		1		7F		
2	8595-608-082-00	PIN/16X96	*		2				
3	1560-601-028-00	SPRING/HC042	*		2				
4	V580-140-504-00	PIN,SPRING/5 X40 W	*		2				
5	8663-402-002-00	PLUG/HOSE/A	*		2				

www.emc-motoculture.com

FIG. 12 DISCHARGE COVER SYSTEM (SCMA48)

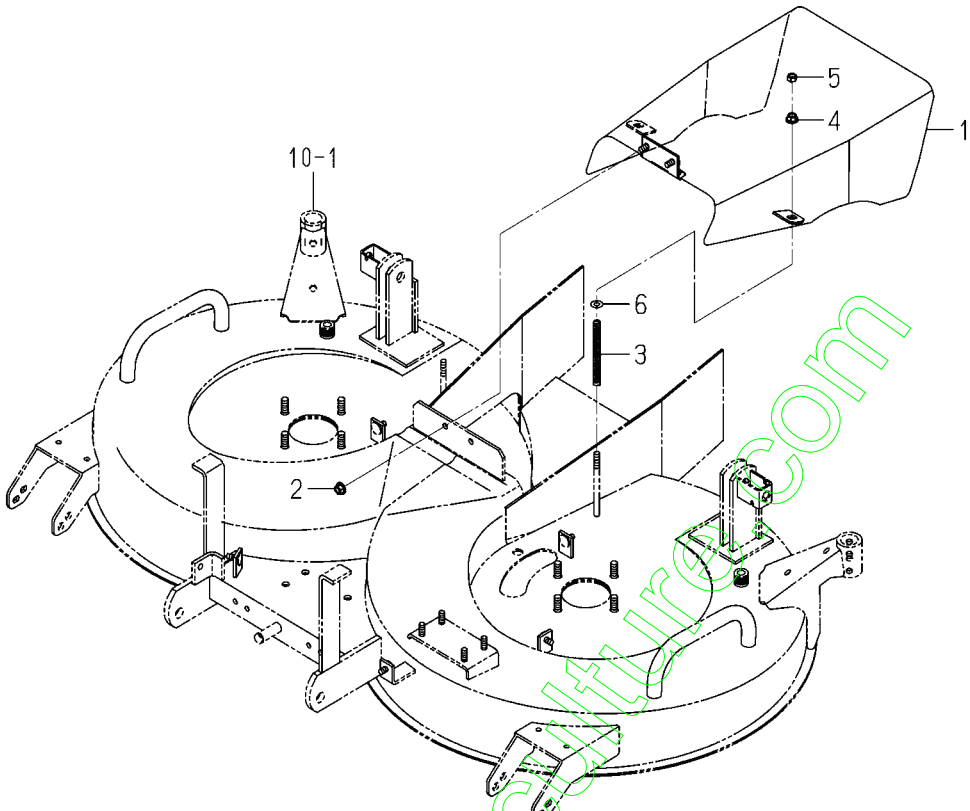

8663-406A-0100

KEY	PART CODE	DESCRIPTION	SPC	TYPE OF MODEL		ITC	COL	GRP	REMARKS
				SCMA48B	SCMA54B				
1	8663-406-510-00	COVER/DISCHARGE/B	*	1			7F		
2	V363-260-008-00	NUT/WASHER	*	2					
3	8663-406-001-00	SPRING/HC110	*	2					
4	V363-260-008-00	NUT/WASHER	*	2					
5	V304-260-008-00	NUT	*	2					
6	V411-260-008-00	WASHER,PL/M 8	*	2					

www.engineotechnic.com

FIG. 13 DISCHARGE COVER SYSTEM (SCMA54)

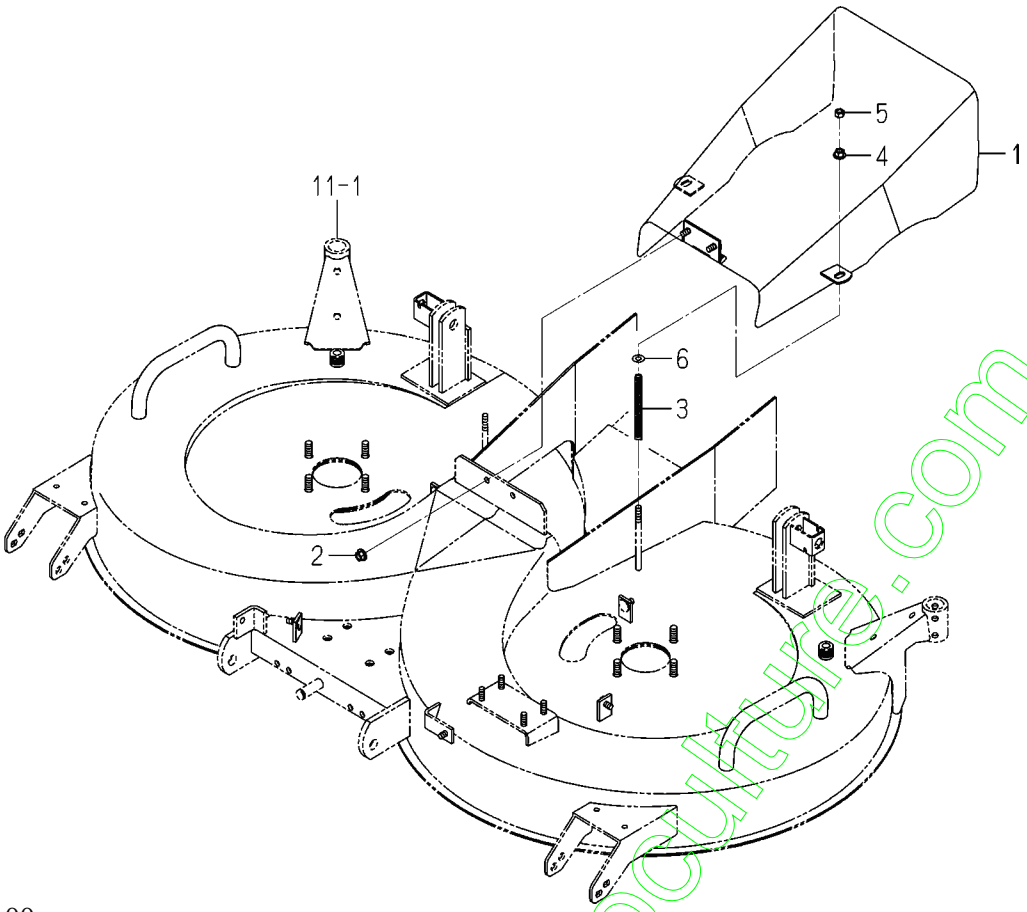

8665-406A-0100

KEY	PART CODE	DESCRIPTION	SPC	TYPE OF MODEL SCMA48B	TYPE OF MODEL SCMA54B	ITC	COL	GRP	REMARKS
1	8665-406-510-00	COVER/DISCHARGE/B	*		1		7F		
2	V363-260-008-00	NUT/WASHER	*		2				
3	8663-406-001-00	SPRING/HC110	*		2				
4	V363-260-008-00	NUT/WASHER	*		2				
5	V304-260-008-00	NUT	*		2				
6	V411-260-008-00	WASHER,PL/M 8	*		2				

www.emc-motoculture.com

FIG. 14 BELT COVER SYSTEM (SCMA48)

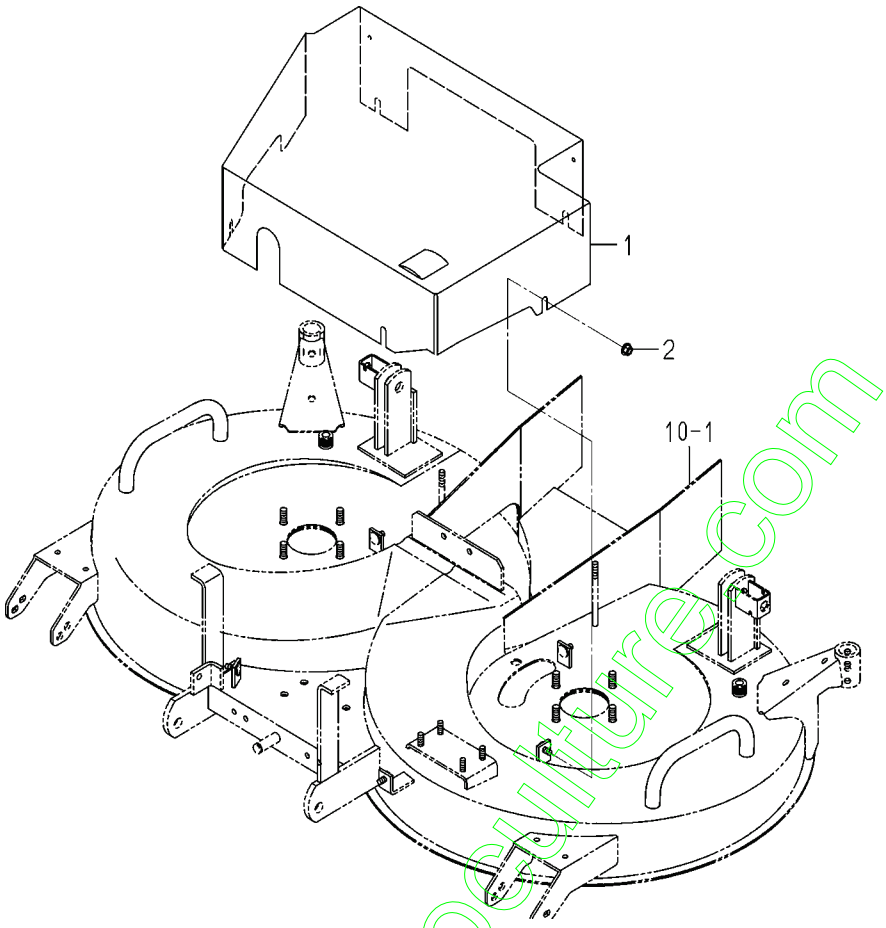

8663-407B-0100

KEY	PART CODE	DESCRIPTION	SPC	TYPE OF MODEL SCMA48B	TYPE OF MODEL SCMA54B	ITC	COL	GRP	REMARKS
1	8663-407-051-00	COVER/BELT/B	*	1			7F		
2	V363-260-008-00	NUT/WASHER	*	5					

www.emc-motoculture.com

FIG. 15 BELT COVER SYSTEM (SCMA54)

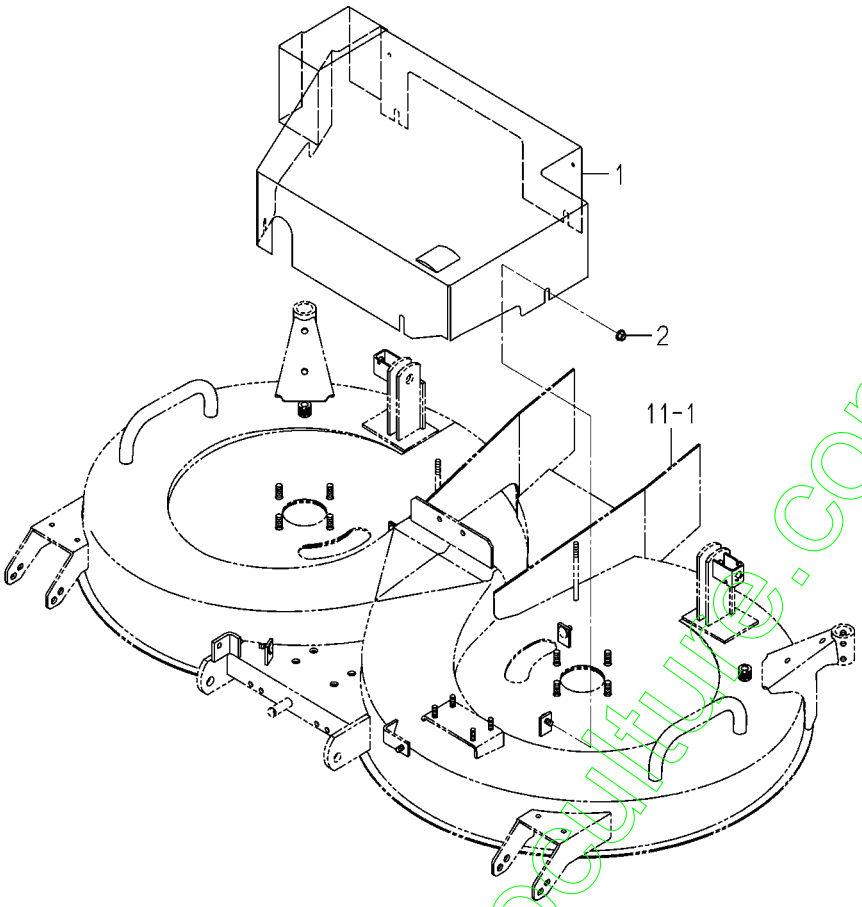

8665-407B-0100

KEY	PART CODE	DESCRIPTION	SPC	TYPE OF MODEL SCMA48B	TYPE OF MODEL SCMA54B	ITC	COL	GRP	REMARKS
1	8665-407-510-10	COVER/BELT/B COMP	*		1		7F		
2	V363-260-008-00	NUT/WASHER	*		5				

www.emc-motoculture.com

FIG. 16 GAUGE WHEEL SYSTEM

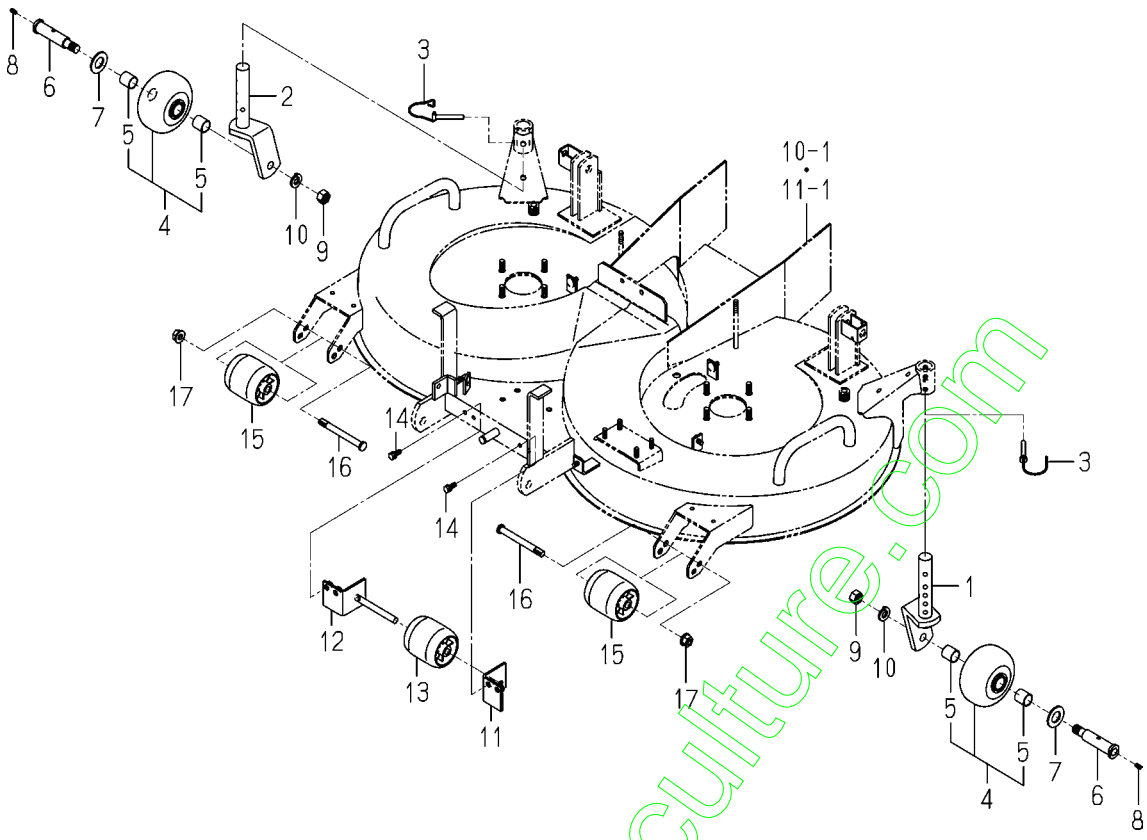

8663-501A-0100

KEY	PART CODE	DESCRIPTION	SPC	TYPE OF MODEL SCMA48B	TYPE OF MODEL SCMA54B	ITC	COL	GRP	REMARKS
1	8663-501-210-00	FORK/WHEEL/LH COMP	*	1	1				
2	8663-501-220-00	FORK/WHEEL/RH COMP	*	1	1				
3	8663-501-240-00	PIN/08X60 COMP	*	2	2				
4	8657-501-530-00	WHEEL/GAUGE ASSY	*	2	2				
5	8654-501-283-00	BUSH/22X25X25	*	4	4				
6	8663-501-001-10	PIN/22X106	*	2	2				
7	V411-260-022-00	WASHER,PL/M22	*	2	2				
8	V760-150-000-00	NIPPLE,GREASE	*	2	2				
9	V304-460-016-00	NUT/M16	*	2	2				
10	V401-160-016-00	WASHER,SP/M16	*	2	2				
11	8663-501-510-00	STAY/GAUGE/LH COMP	*	1	1				
12	8663-501-520-00	STAY/GAUGE/RH COMP	*	1	1				
13	8595-501-001-10	WHEEL/GAUGE/FRONT	*	1	1				
14	V211-260-802-00	BOLT/S	*	4	4				
15	8595-501-001-10	WHEEL/GAUGE/FRONT	*	2	2				
16	8595-505-051-30	PIN/12X117	*	2	2				
17	V360-260-012-00	NUT/WASHER	*	2	2				

www.eurotocculture.com

FIG. 17 LINK SYSTEM

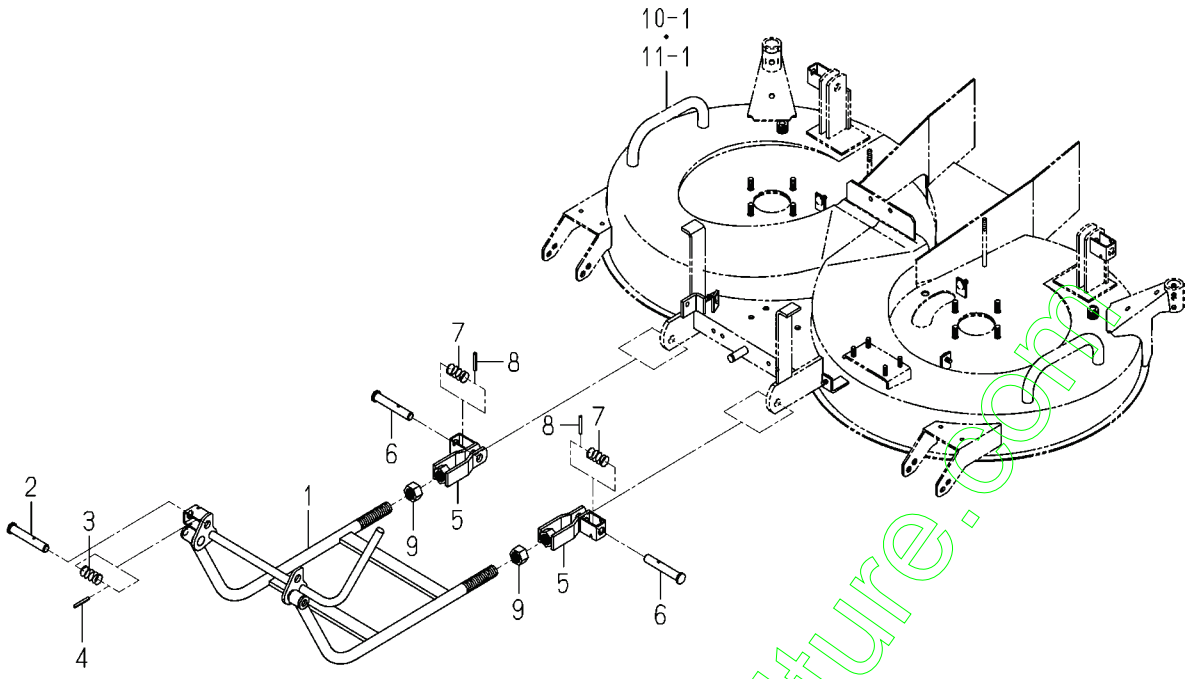

8663-608 -0100

KEY	PART CODE	DESCRIPTION	SPC	TYPE OF MODEL SCMA48B	TYPE OF MODEL SCMA54B	ITC	COL	GRP	REMARKS
1	8663-608-210-00	ARM/FRONT COMP	*	1	1		7F		
2	8595-608-082-00	PIN/16X96	*	1	1				
3	1560-601-028-00	SPRING/HC042	*	1	1				
4	V580-140-504-00	PIN,SPRING/5 X40 W	*	1	1				
5	8657-608-720-00	FORK/M22 COMP	*	2	2				
6	8595-608-082-00	PIN/16X96	*	2	2				
7	1560-601-028-00	SPRING/HC042	*	2	2				
8	V580-140-504-00	PIN,SPRING/5 X40 W	*	2	2				
9	V334-460-022-00	NUT	*	2	2				

www.emmotoculture.com

FIG. 18 LABEL

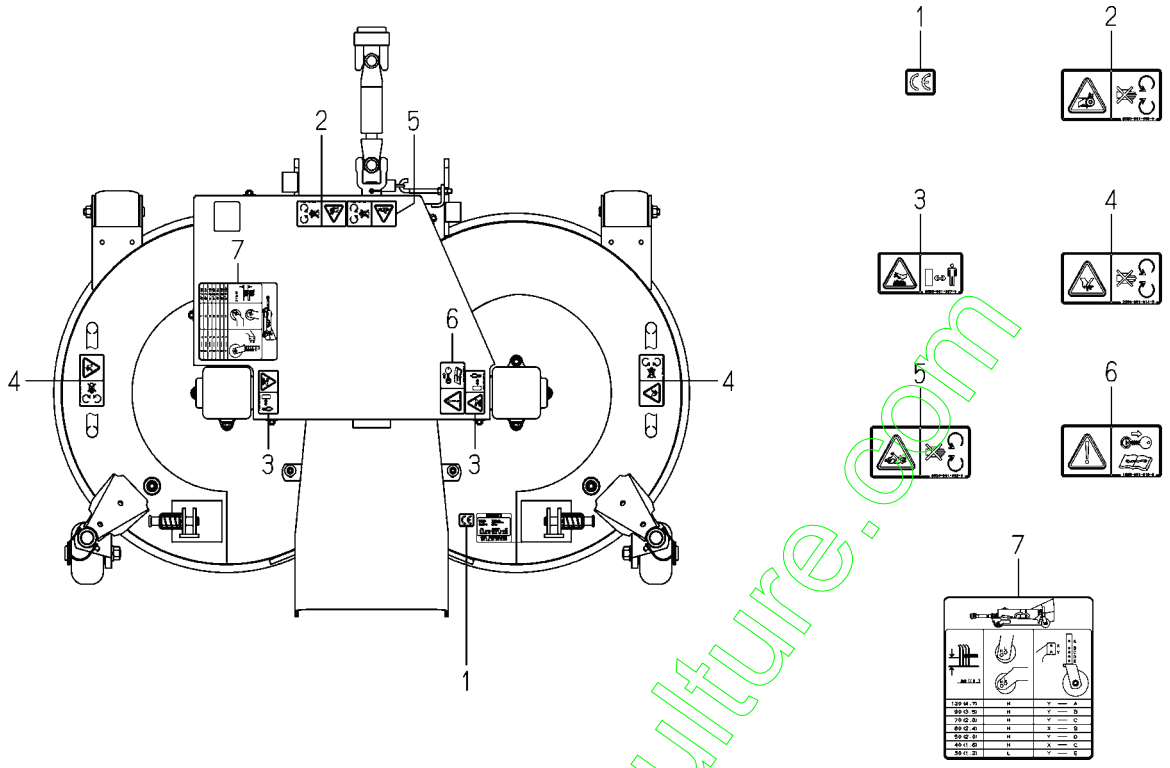

8663-901A-0100

KEY	PART CODE	DESCRIPTION	SPC	TYPE OF MODEL SCMA48B	TYPE OF MODEL SCMA54B	ITC	COL	GRP	REMARKS
1	2500-901-027-00	LABEL/CE	*	1	1				
2	8595-901-006-00	LABEL/WARNING/BELT	*	1	1				
3	8595-901-007-00	LABEL/WARNING/HOT	*	2	2				
4	2500-901-014-30	LABEL/DANGER	*	2	2				
5	8654-901-002-00	LABEL/PTO	*	1	1				
6	1593-901-015-00	LABEL/MAINTENANCE	*	1	1				
7	8663-901-001-00	LABEL/GAUGEWHEEL	*	1	1				

www.engmotoculture.com

FIG. 19 UNIVERSAL JOINT SET (SCMA48-OPTION)

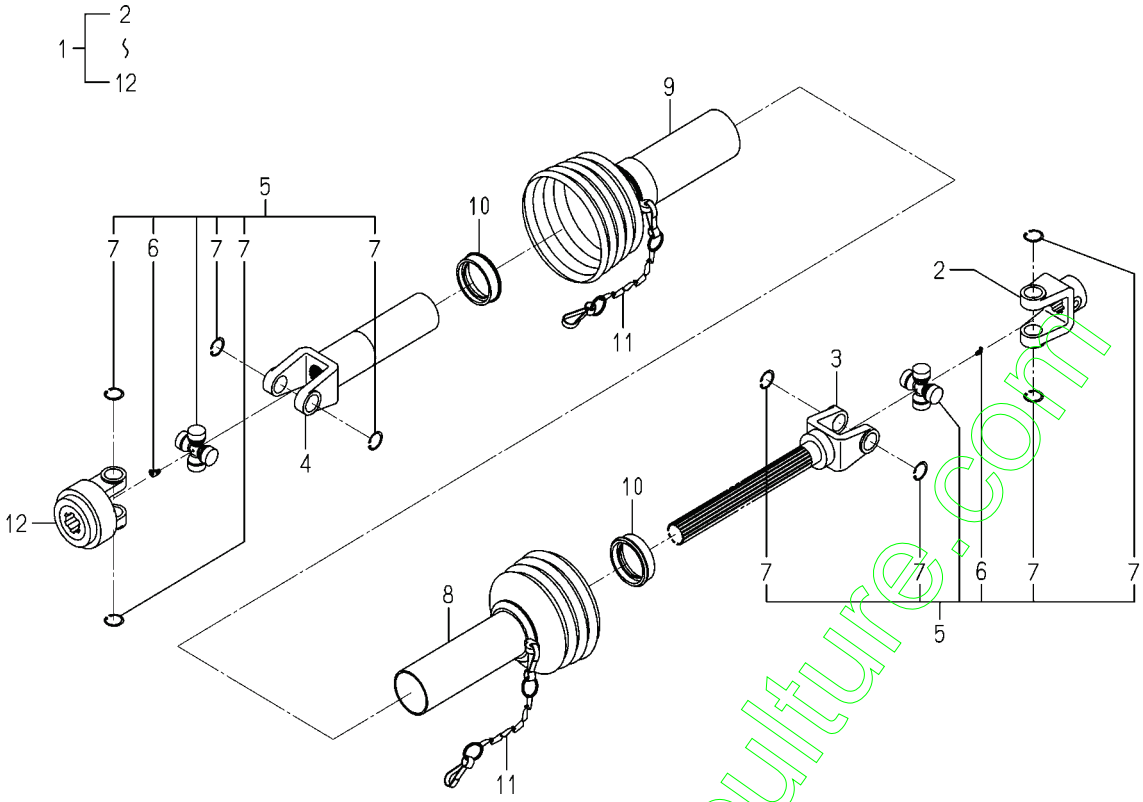

8663-101Z-0100

KEY	PART CODE	DESCRIPTION	SPC	TYPE OF MODEL SCMA48B	TYPE OF MODEL SCMA54B	ITC	COL	GRP	REMARKS
1	8663-101-210-00	JOINT/UNIVERSAL SET	T	1					
2	8654-101-221-00	FITTINGYOKE	T	1					
3	8663-101-211-00	SHAFTYOKE	T	1					
4	8663-101-212-00	SLEEVEYOKE	T	1					
5	8654-101-230-00	JOURNALCROSSE ASSY	T	2					
6	8654-101-232-00	GREASENIPPLE	T	2					
7	8654-101-233-00	SURCLIP/HOLE	T	8					
8	8663-101-213-00	SAFETYGUARD/IN	T	1					
9	8663-101-214-00	SAFETYGUARD/OUT	T	1					
10	7821-102-008-00	RING/SLIDE	T	2					
11	7821-102-220-00	CHAIN ASSY	T	2					
12	8657-101-501-00	AS YOKE ASSY	T	1					

www.gc-motoculture.com

FIG. 20 UNIVERSAL JOINT SET (SCMA54-OPTION)

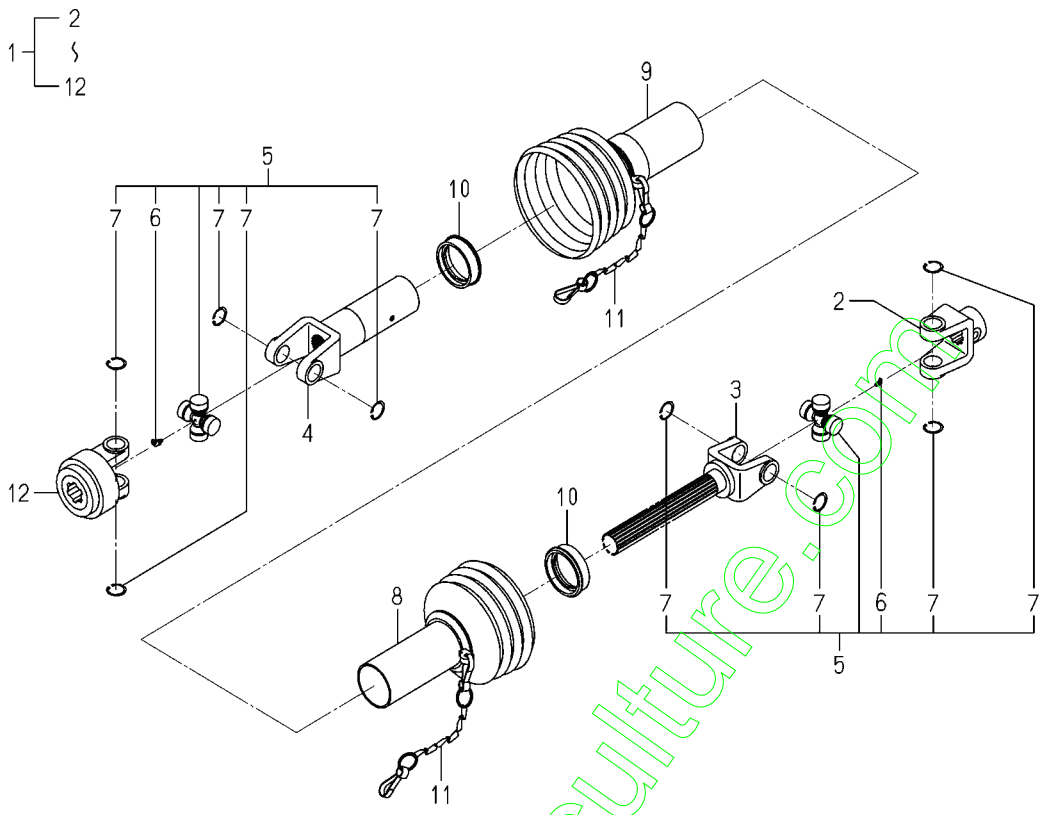

8665-101Z-0100

KEY	PART CODE	DESCRIPTION	SPC	TYPE OF MODEL SCMA48B	TYPE OF MODEL SCMA54B	ITC	COL	GRP	REMARKS
1	8665-101-210-00	JOINT/UNIVERSAL SET	T		1				
2	8654-101-221-00	FITTINGYOKE	T		1				
3	8665-101-211-00	SHAFTYOKE	T		1				
4	8665-101-212-00	SLEEVEYOKE	T		1				
5	8654-101-230-00	JOURNALCROSSE ASSY	T		2				
6	8654-101-232-00	GREASENIPPLE	T		2				
7	8654-101-233-00	SURCLIP/HOLE	T		8				
8	8665-101-213-00	SAFETYGUARD/IN	T		1				
9	8665-101-214-00	SAFETYGUARD/OUT	T		1				
10	7821-102-008-00	RING/SLIDE	T		2				
11	7821-102-220-00	CHAIN ASSY	T		2				
12	8657-101-501-00	AS YOKE ASSY	T		1				

www.tractorpartsoculture.com

FIG. 21 COMPONENT PARTS FOR 8659-101-210-00 ON Fig.1

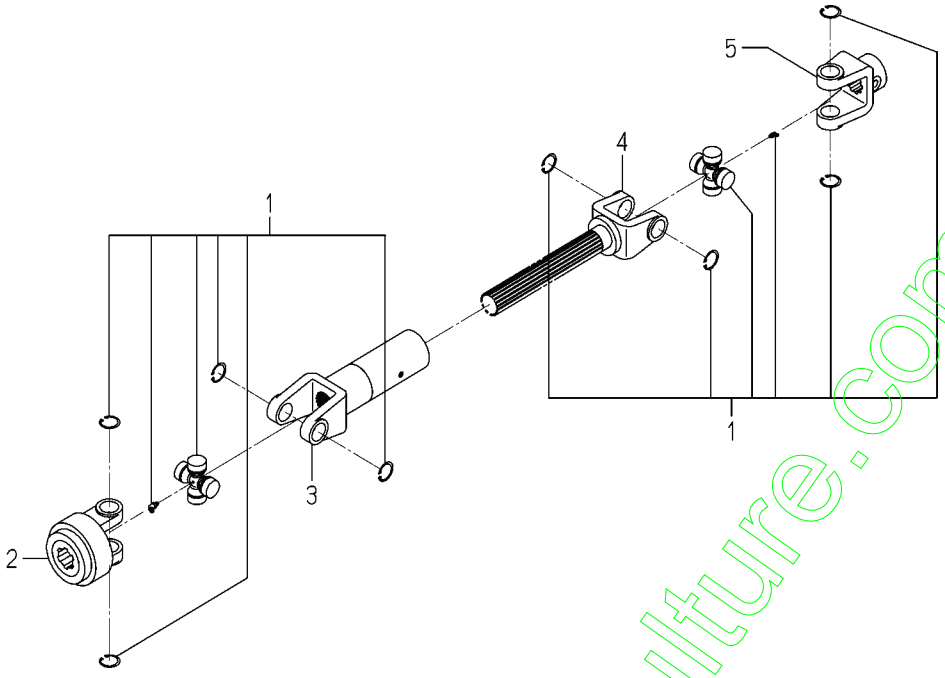

8659-101-210-0D

KEY	PART CODE	DESCRIPTION	SPC	TYPE OF MODEL SCMA48B	TYPE OF MODEL SCMA54B	ITC	COL	GRP	REMARKS
1	8659-101-211-00	UJ ASSY	*		2				
2	8659-101-212-00	ASYOKE ASSY	*		1				
3	8659-101-213-00	SLEEVEYOKE	*		1				
4	8659-101-214-00	YOKE/SHAFT	*		1				
5	8659-101-215-00	FITTINGYOKE	*		1				

www.emc-motoculture.com

FIG. 22 COMPONENT PARTS FOR 8662-101-210-00 ON Fig.2

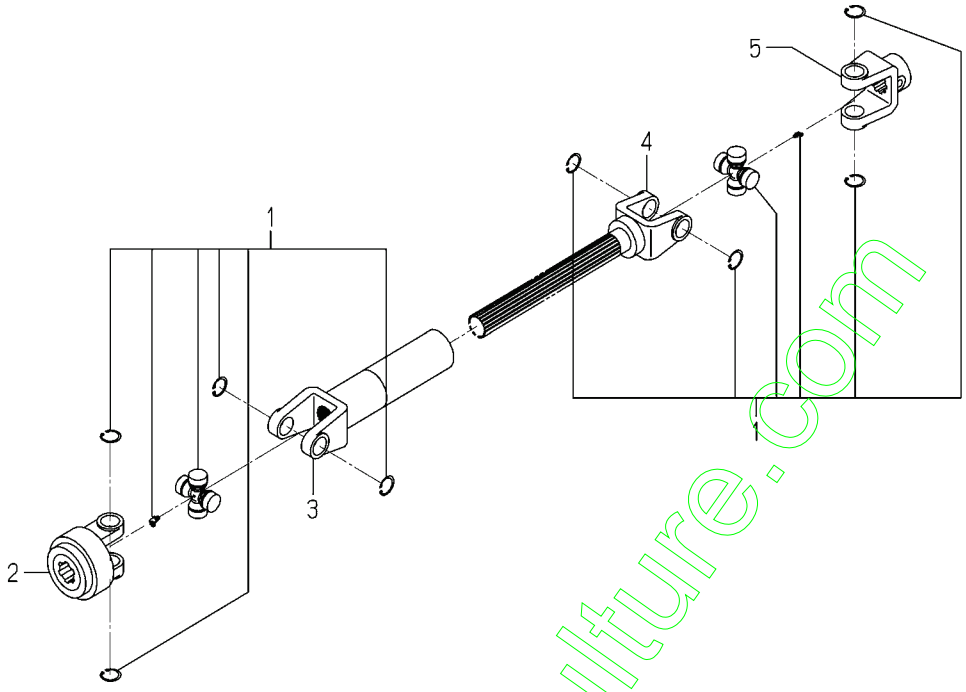

8662-101-210-0C

KEY	PART CODE	DESCRIPTION	SPC	TYPE OF MODEL SCMA48B	TYPE OF MODEL SCMA54B	ITC	COL	GRP	REMARKS
1	8659-101-211-00	UJ ASSY	*	2					
2	8659-101-212-00	ASYOKE ASSY	*	1					
3	8662-101-213-00	SLEEVEYOKE	*	1					
4	8662-101-214-00	SHAFTYOKE	*	1					
5	8659-101-215-00	FITTINGYOKE	*	1					

www.enginotoculture.com

Numerical Index

Part Code	Fig.	Key	Part Code	Fig.	Key	Part Code	Fig.	Key
1337-401-006-00	3	31	8595-901-007-00	18	3	8663-201-056-00	3	14
	4	32	8654-101-221-00	19	2		4	15
1415-216-602-00	3	8		20	2	8663-201-057-00	3	17
	4	9	8654-101-230-00	19	5		4	18
1444-116-007-00	3	19		20	5	8663-201-058-10	3	23
	4	20	8654-101-232-00	19	6	8663-201-059-00	3	11
1560-220-004-10	3	21		20	6		4	12
	4	22	8654-101-233-00	19	7	8663-201-061-00	3	12
	5	35		20	7		4	13
	6	35	8654-201-410-10	5	33	8663-201-510-00	3	24
1560-601-028-00	10	3		6	33		4	25
	11	3	8654-501-283-00	16	5	8663-202-051-00	5	1
	17	3	8654-901-002-00	18	5		6	1
	17	7	8657-101-501-00	19	12	8663-202-052-10	5	7
1593-901-015-00	18	6		20	12		6	7
1594-221-001-00	5	2	8657-501-530-00	16	4	8663-202-055-00	5	9
	6	2	8657-608-720-00	17	5		6	9
2500-901-014-30	18	4	8659-101-210-00	1	1	8663-202-056-00	5	10
2500-901-027-00	18	1	8659-101-211-00	21	1		6	10
2502-407-001-10	3	25		22	1	8663-202-057-10	5	12
	4	26	8659-101-212-00	21	2		6	12
3304-521-015-00	3	28		22	2	8663-202-058-00	5	14
	4	29	8659-101-213-00	21	3		5	25
3517-205-007-00	3	26	8659-101-214-00	21	4		6	14
	4	27	8659-101-215-00	21	5		6	25
3737-341-007-00	3	30		22	5	8663-202-059-00	5	15
	4	31	8662-101-210-00	2	1		5	26
7821-102-008-00	19	10	8662-101-213-00	22	3		6	15
	20	10	8662-101-214-00	22	4		6	26
7821-102-220-00	19	11	8663-101-210-00	19	1	8663-202-061-00	5	34
	20	11	8663-101-211-00	19	3	8663-202-062-10	5	23
7955-201-026-00	5	13	8663-101-212-00	19	4		6	23
	5	24	8663-101-213-00	19	8	8663-202-510-00	5	22
	6	13	8663-101-214-00	19	9		6	22
	6	24	8663-201-051-00	3	1	8663-301-004-00	7	15
8595-201-021-00	7	3		4	1	8663-301-051-00	7	1
8595-201-022-00	7	4	8663-201-052-00	3	3	8663-301-052-00	7	8
8595-501-001-10	16	13		4	4	8663-301-053-00	7	14
	16	15	8663-201-053-00	3	6	8663-306-001-10	8	1
8595-505-051-30	16	16	8663-201-054-00	3	7	8663-306-002-10	8	2
8595-608-082-00	10	2		3	18	8663-306-004-00	8	4
	11	2		4	8		9	4
	17	2		4	19	8663-306-210-10	8	3
	17	6	8663-201-055-00	3	10		9	3
8595-901-006-00	18	2		4	11	8663-402-002-00	10	5

www.emc-motoculture.com

Numerical Index

8663-097-120-00

Part Code	Fig.	Key	Part Code	Fig.	Key	Part Code	Fig.	Key
8663-402-002-00	11	5	V360-260-012-00	16	17	V704-140-015-00	4	30
8663-402-510-20	10	1	V363-260-008-00	3	13	V704-140-025-00	3	9
8663-406-001-00	12	3		4	14		3	22
	13	3		12	2		4	10
8663-406-510-00	12	1		12	4		4	23
8663-407-051-00	14	1		13	2		5	5
8663-501-001-10	16	6		13	4		5	21
8663-501-210-00	16	1		14	2		5	32
8663-501-220-00	16	2		15	2		5	36
8663-501-240-00	16	3	V401-160-010-00	7	7		6	5
8663-501-510-00	16	11	V401-160-012-00	8	6		6	21
8663-501-520-00	16	12		9	6		6	32
8663-608-210-00	17	1	V401-160-016-00	16	10		6	36
8663-901-001-00	18	7	V411-260-008-00	12	6	V705-140-052-00	3	5
8665-101-210-00	20	1		13	6		3	16
8665-101-211-00	20	3	V411-260-022-00	16	7		4	6
8665-101-212-00	20	4	V580-140-504-00	10	4		4	17
8665-101-213-00	20	8		11	4		5	4
8665-101-214-00	20	9		17	4		5	19
8665-201-051-00	4	7		17	8		5	30
8665-201-052-10	4	24	V580-140-602-80	5	16		6	4
8665-201-053-00	4	2		5	27		6	19
8665-202-051-00	6	34		6	16		6	30
8665-306-001-10	9	1		6	27		7	13
8665-306-002-10	9	2	V580-140-804-00	1	2	V707-140-062-00	7	10
8665-402-510-20	11	1		2	2	V721-103-106-50	5	8
8665-406-510-00	13	1	V600-110-620-40	5	17		6	8
8665-407-510-10	15	1		5	28	V721-103-107-50	7	2
V203-361-203-50	8	5		6	17	V744-125-521-00	5	6
	9	5		6	28		5	20
V211-260-802-00	5	11	V600-110-620-50	5	3		5	31
	6	11		5	18		6	6
	7	5		5	29		6	20
	16	14		6	3		6	31
V211-260-802-50	3	2		6	18		7	12
V211-260-803-00	4	3		6	29	V760-150-000-00	16	8
V304-260-008-00	3	32		7	11			
	4	33	V600-110-620-60	7	9			
	12	5	V600-150-620-50	3	4			
	13	5		3	15			
V304-260-010-00	3	20		4	5			
	4	21		4	16			
	7	6	V704-140-015-00	3	27			
V304-460-016-00	16	9		3	29			
V334-460-022-00	17	9		4	28			

www.emc-motoculture.com

Alpabetical Index

8663-097-120-00

Description	Fig.	Key
ARM/FRONT COMP	17	1
ARM/TENSION ASSY	3	24
	4	25
AS YOKE ASSY	19	12
	20	12
ASYOKE ASSY	21	2
	22	2
BEARING, RB/6204	5	17
	5	28
	6	17
	6	28
BEARING, RB/6205	5	3
	5	18
	5	29
	6	3
	6	18
	6	29
	7	11
BEARING, RB/6205SS	3	4
	3	15
	4	5
	4	16
BEARING, RB/6206	7	9
BEARING/BALL 6205SH2	5	2
	6	2
BELT/VB036	3	23
BELT/VB038	4	24
BLADE/60X640/C	8	1
BLADE/60X640/D	8	2
BLADE/60X716/C	9	1
BLADE/60X716/D	9	2
BOLT	8	5
	9	5
BOLT, SEMS	4	3
BOLT/S	3	2
	5	11
	6	11
	7	5
	16	14
BUSH/15X17X11	3	25
	4	26
BUSH/22X25X25	16	5
CASE/BEVEL/LH	5	12
	6	12
CASE/BEVEL/RH	5	23

Description	Fig.	Key
CASE/BEVEL/RH	6	23
CHAIN ASSY	19	11
	20	11
COLLAR/BLADE	7	14
COUPRING/21X36X65	3	21
	4	22
	5	35
	6	35
COVER/BELT/B	14	1
COVER/BELT/B COMP	15	1
COVER/DISCHARGE/B	12	1
	13	1
DECK/MOWER/48/B COMP	10	1
DECK/MOWER/54/B COMP	11	1
FITTINGYOKE	19	2
	20	2
	21	5
	22	5
FORK/M22 COMP	17	5
FORK/WHEEL/LH COMP	16	1
FORK/WHEEL/RH COMP	16	2
GEAR/BEVEL/21-25-21	5	22
	6	22
GEAR/BEVEL/25-2 SET	5	33
	6	33
GREASENIPPLE	19	6
	20	6
HUB/SPACER	5	15
	5	26
	6	15
	6	26
JOINT/UNIVERSAL SET	1	1
	2	1
	19	1
	20	1
JOURNALCROSSE ASSY	19	5
	20	5
KEY/07X07X22	3	7
	3	18
	4	8
	4	19
LABEL/CE	18	1
LABEL/DANGER	18	4
LABEL/GAUGEWHEEL	18	7
LABEL/MAINTENANCE	18	6

Description	Fig.	Key
LABEL/PTO	18	5
LABEL/WARNING/BELT	18	2
LABEL/WARNING/HOT	18	3
METAL/BEVELCASE	5	7
	6	7
METAL/BLADE/B	7	1
METAL/INPUT	3	1
	4	1
METAL/OUTPUT	3	10
	4	11
NIPPLE, GREASE	16	8
NUT	3	20
	3	32
	4	21
	4	33
	7	6
	12	5
	13	5
	17	9
NUT/M16	16	9
NUT/WASHER	3	13
	4	14
	12	2
	12	4
	13	2
	13	4
	14	2
	15	2
	16	17
O-RING/G65	5	8
	6	8
O-RING/G75	7	2
PIN, SPRING/5 X40 W	10	4
	11	4
	17	4
	17	8
PIN, SPRING/6 X28 W	5	16
	5	27
	6	16
	6	27
PIN, SPRING/8 X40 W	1	2
	2	2
PIN/08X18	7	15
PIN/08X60 COMP	16	3
PIN/12X117	16	16

www.emc-motoculture.com

Alpabetical Index

8663-097-120-00

Description	Fig.	Key
PIN/16X96	10	2
	11	2
	17	2
	17	6
PIN/22X106	16	6
PLATE/I/22X64	4	2
PLATE/I/80X110 COMP	8	3
	9	3
PLUG, DRAIN (1/4)	5	13
	5	24
	6	13
	6	24
PLUG/HOSE/A	10	5
	11	5
PULLEY/FT50X49	3	28
	4	29
PULLEY/V2B102	3	6
PULLEY/V2B90	3	17
	4	18
PULLEY/V2B93	4	7
RING, SNAP/15 C	3	27
	3	29
	4	28
	4	30
RING, SNAP/25 C	3	9
	3	22
	4	10
	4	23
	5	5
	5	36
	6	5
	6	36
RING, SNAP/52 C	3	5
	3	16
	4	6
	4	17
	5	4
	5	19
	5	30
	6	4
	6	19
	6	30
	7	13
RING/SLIDE	19	10
	20	10
RING/SNAP	7	10
ROD, CHAIN TENSION	3	30
	4	31
SAFETYGUARD/IN	19	8
	20	8
SAFETYGUARD/OUT	19	9
	20	9
SEAL, OIL/TC255210	5	6
	5	20
	5	31
	6	6
	6	20
	6	31
	7	12
SHAFT/48/LH/FRONT	3	14
	4	15
SHAFT/BLADE/B	7	8
SHAFT/CASE	5	14
	5	25
	6	14
	6	25
SHAFT/CENTER/48	5	34
SHAFT/CENTER/54	6	34
SHAFT/INPUT	3	3
	4	4
SHAFT/LH/REAR	5	1
	6	1
SHAFTYOKE	19	3
	20	3
	22	4
SHIM/0.1	5	9
	6	9
	7	3
SHIM/0.2	5	10
	6	10
	7	4
SHIM/0.5	3	12
	4	13
SHIM/1.0	3	11
	4	12
SHIM/1.2	8	4
	9	4
SLEEVEYOKE	19	4
	20	4
	21	3
SLEEVEYOKE	22	3
SNAP/RING	5	21
	5	32
	6	21
	6	32
SPRING	3	31
	4	32
SPRING/HC042	10	3
	11	3
	17	3
	17	7
SPRING/HC110	12	3
	13	3
STAY/GAUGE/LH COMP	16	11
STAY/GAUGE/RH COMP	16	12
SURCLIP/HOLE	19	7
	20	7
UJ ASSY	21	1
	22	1
WASHER	3	26
	4	27
WASHER, PL/M 8	12	6
	13	6
WASHER, PL/M22	16	7
WASHER, SP/M10	7	7
WASHER, SP/M12	8	6
	9	6
WASHER, SP/M16	16	10
WASHER/11X30X2	3	19
	4	20
WASHER/26X35X2	3	8
	4	9
WHEEL/GAUGE ASSY	16	4
WHEEL/GAUGE/FRONT	16	13
	16	15
YOKE/SHAFT	21	4

www.emcmotoculture.com

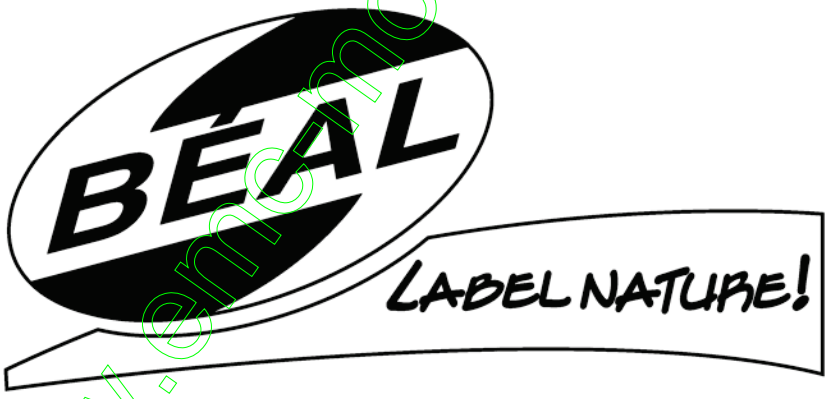

Yvan Béal - 21, av. de l'Agriculture - B.P 16
Z.I. du Brézet - 63014 Clermont-Ferrand Cedex 2
Tél : 04 73 91 93 51 - Télécopie : 04 73 90 23 11
www.yvanbeal.fr - E-mail : info@yvanbeal.fr
R.C.S. B 304 973 886 - S.A.S. au capital de 612 000 €

www.encmotoculture.com